EMC TEST REPORT

Applicant	:	SRNE Solar Co., Ltd
Address	:	4-5F,Building13A,Taihua Wutong Industrial Park ,Gushu Development Zone ,Hangcheng Street,Baoan, Shenzhen, China PR
Manufacturer	:	SRNE SOLAR CO.,LTD Dongguan Branch
Address	:	Room 301, Building 5th, Fuxing Rd No.36, Chang'an Town,Dongguan City, Guangdong Province, China PR
EUT	:	Lithium Battery Energy Storage
Model No		SR-EOS15B
Brand Name:	:	SRNE
Report Number		XK2407013030E
Test Date	:	June 25-28, 2024
Date of Issue	:	July 10, 2024
Test Result:	:	The equipment under test was found to be compliance with the requirements of the standards applied.
Test Procedure Used:	:	EN IEC 61000-6-3:2021 EN IEC 61000-6-1:2019 EN 61000-3-3:2013+A2:2021+AC:2022 EN IEC 61000-3-2:2019+A1:2021

Prepared By:

Shenzhen SiCT Technology Co., Ltd.

202, Building 3, No.111 Huanguan Middle Road, Songyuanxia Community,Guanhu Street, Longhua District, Shenzhen, Guangdong, China

Compiled by:	Reviewed by:	Approved by:
Smile xu	Nima Wu	Andy Wang

This test report is based on a single evaluation of one sample of above mentioned products. It is not permitted to be duplicated in extracts without written approval of Shenzhen SiCT Technology Co., Ltd.

TABLE OF CONTENTS

1 - GENERAL INFORMATION 4
1.1 PRODUCT DESCRIPTION FOR EQUIPMENT UNDER TEST (EUT) 4
1.2 TEST STANDARDS 5
1.3 TEST SUMMARY 5
1.4 TEST METHODOLOGY 6
1.5 TEST FACILITY 6
1.6 TEST EQUIPMENT LIST AND DETAILS 6
1.7 DESCRIPTION OF TEST MODES 8
2 - SYSTEM TEST CONFIGURATION 9
2.1 JUSTIFICATION 9
2.2 EUT EXERCISE SOFTWARE 9
2.3 SPECIAL ACCESSORIES 9
2.4 TEST SETUP DIAGRAM 9
2.5 GENERAL DESCRIPTION OF TEST AUXILIARY 9
3 - DISTURBANCE VOLTAGE AT THE MAINS TERMINALS 10
3.1 MEASUREMENT UNCERTAINTY 10
3.2 LIMIT OF DISTURBANCE VOLTAGE AT THE MAINS TERMINALS (CLASS B) 10
3.3 EUT SETUP 10
3.4 INSTRUMENT SETUP 11
3.5 TEST PROCEDURE 11
3.6 SUMMARY OF TEST RESULTS 11
3.7 RADIATED EMISSIONS TEST DETAIL AND TEST RESULT 11
4 - RADIATED DISTURBANCES 12
4.1 MEASUREMENT UNCERTAINTY 12
4.2 LIMIT OF RADIATED DISTURBANCES (CLASS B) 12
4.3 EUT SETUP 12
4.4 TEST RECEIVER SETUP 13
4.5 TEST PROCEDURE 13
4.6 CORRECTED AMPLITUDE & MARGIN CALCULATION 13
4.7 RADIATED EMISSIONS TEST DETAIL AND TEST RESULT 14
5– HARMONIC CURRENT TEST 16
5.1 APPLICATION OF HARMONIC CURRENT EMISSION 16
5.2 BLOCK DIAGRAM OF TEST SETUP: 16
5.3 TEST PROCEDURE: 16
5.4 TEST RESULT 17
6 – VOLTAGE FLUCTUATIONS AND FLICKER TEST 18
6.1 APPLICATION AND LIMIT OF VOLTAGE FLUCTUATIONS AND FLICKER TEST 18
6.2 BLOCK DIAGRAM OF TEST SETUP: 18
6.3 TEST PROCEDURE: 18
6.4 TEST RESULT 19
7- IMMUNITY TEST DESCRIPTION 20
7.1 GENERAL DESCRIPTION 20
7.2 THE PHENOMENA ALLOWED DURING AND AFTER TEST IN EACH CRITERION ARE CLEARLY STATED IN THE FOLLOWING TABLE 21
7.3 DEVIATIONS FROM THE STANDARD 21
8- IMMUNITY TEST RESULTS 22
8.1 ELECTROSTATIC DISCHARGE IMMUNITY TEST 22
8.1.1 TEST SPECIFICATION 22
8.1.2 TEST SETUP 22
8.1.3 TEST PROCEDURE 23
8.1.4 PERFORMANCE CRITERION REQUIRED & TEST RESULT 24
8.2 RADIATED SUSCEPTIBILITY TEST 25
8.2.1 TEST SPECIFICATION 25
8.2.2 TEST SETUP 25
8.2.3 TEST PROCEDURE 25

8.2.4 Performance Criterion Required & Test Result 26
8.3 Electrical Fast Transient/Burst Immunity Test 27
8.3.1Test Specification 27
8.3.2 Test Setup 27
8.3.3 Test Procedure 28
8.3.4 Performance Criterion Required & Test Result 28
8.4 Surge Immunity Test 29
8.4.1 Test Specification 29
8.4.2 Test Setup 29
8.4.3 Test Procedure 30
8.4.4 Performance Criterion Required & Test Result 30
8.5 Conducted Susceptibility Test 31
8.5.1 Test Specification 31
8.5.2 Test Setup 31
8.5.3 Test Procedure 31
8.5.4 Performance Criterion Required & Test Result 32
8.6 Voltage Dips, Short Interruptions Immunity Tests 33
8.6.1 Test Specification 33
8.6.2 Test Setup 33
8.6.3 Test Procedure 33
8.6.4 Performance Criterion Required & Test Result 34

APPENDIX A - EUT PHOTOGRAPHS 35

1 - GENERAL INFORMATION

1.1 Product Description for Equipment Under Test (EUT)

Client Information

Applicant:	SRNE Solar Co., Ltd
Address of applicant:	4-5F,Building13A,Taihua Wutong Industrial Park ,Gushu Development Zone ,Hangcheng Street,Baoan, Shenzhen, China PR
Manufacturer:	SRNE SOLAR CO.,LTD Dongguan Branch
Address of manufacturer:	Room 301, Building 5th, Fuxing Rd No.36, Chang'an Town,Dongguan City, Guangdong Province, China PR

General Description of E.U.T

EUT Name:	Lithium Battery Energy Storage
Trade mark:	SRNE
Test Model:	SR-EOS15B
Model(s):	N/A
Operating Mode.:	Mode1:Power on
Power Rating:	Input:51.2V

Remark: ** The test data gathered are from the production sample provided by the manufacturer.*
** Supplementary models have the same circuit, but with different appearance.*

1.2 Test Standards

The following Declaration of Conformity report of EUT is prepared in accordance with

EN IEC 61000-6-3:2021

EN IEC 61000-6-1:2019

EN IEC 61000-3-2:2019+A1:2021

EN 61000-3-3:2013+A2:2021+AC:2022

The objective of the manufacturer is to demonstrate compliance with the described standards above.

1.3 Test Summary

For the EUT described above. The standards used were EN 61000-6-3 Class B for Emissions & EN 61000-6-1 for Immunity.

Table 1 : Tests Carried Out Under EN IEC 61000-6-3:2021

Standard	Test Items	Status
EN IEC 61000-6-3:2021	Disturbance Voltage at The Mains Terminals (150KHz To 30MHz)	×
	Radiated Disturbances (30MHz To 1000MHz)	√

√ Indicates that the test is applicable
× Indicates that the test is not applicable

Table 2 : Tests Carried Out Under EN IEC 61000-3-2:2019+A1:2021/ EN 61000-3-3:2013+A2:2021

Standard	Test Items	Status
EN IEC 61000-3-2:2019+A1:2021	Harmonic Current Test	×
EN 61000-3-3:2013+A2:2021+AC:2022	Voltage Fluctuations and Flicker Test	×

√ Indicates that the test is applicable
× Indicates that the test is not applicable

Table 3 : Tests Carried Out Under EN IEC 61000-6-1:2019

Standard	Test Items	Status
EN 61000-4-2:2009	Electrostatic discharge Immunity	√
EN IEC 61000-4-3:2020	Radiated Susceptibility (80MHz to 1GHz)	√
EN 61000-4-4:2012	Electrical Fast Transient/Burst Immunity	×
EN 61000-4-5:2014+A1:2017	Surge Immunity	×
EN 61000-4-6:2014+AC:2015	Conducted Susceptibility (150kHz to 80MHz)	×
EN 61000-4-8: 2010	Power Frequency Magnetic Field Immunity (50/60Hz)	×
EN IEC 61000-4-11:2020/AC:2022	Voltage Dips, Short Interruptions Immunity	×

√ Indicates that the test is applicable
× Indicates that the test is not applicable

1.4 Test Methodology

All measurements contained in this report were conducted with CISPR 16-1-1: 2019, Radio disturbance and immunity measuring apparatus – Measuring apparatus, and CISPR 16-2-3: 2010, Method of measurement of disturbances and immunity.

1.5 Test Facility

Shenzhen SiCT Technology Co., Ltd.

202, Building 3, No.111 Huanguan Middle Road, Songyuanxia Community,Guanhu Street, Longhua District, Shenzhen,Guangdong, China

1.6 Test Equipment List and Details

1.6.1CONDUCTED EMISSION

Item	Kind of Equipment	Manufacturer	Type No.	Serial No.	Last calibration	Calibrated until	Calibration period
1	LISN	R&S	ENV216	101334	Mar. 20,2024	Mar. 19,2025	1 year
2	LISN	SCHWARZBECK	NNLK 8129	8129267	Mar. 20,2024	Mar. 19,2025	1 year
3	Pulse Limiter	SCHWARZBECK	VTSD 9561F	9716	Mar. 20,2024	Mar. 19,2025	1 year
4	50Ω SWITCH	ANRITSU CORP	MP59B	6200983704	Mar. 20,2024	Mar. 19,2025	1 year
5	TEST CABLE	N/A	C01	N/A	Mar. 20,2024	Mar. 19,2025	1 year
6	TEST CABLE	N/A	C02	N/A	Mar. 20,2024	Mar. 19,2025	1 year
7	TEST CABLE	N/A	C03	N/A	Mar. 20,2024	Mar. 19,2025	1 year
8	EMI Test Receiver	R&S	ESCI	101318	Mar. 20,2024	Mar. 19,2025	1 year
9	Passive Voltage Probe	ESH2-Z3	R&S	100173	Mar. 20,2024	Mar. 19,2025	1 year
10	Triple-Loop Antenna	EVERFINE	LIA-2	11020016	Mar. 20,2024	Mar. 19,2025	1 year
11	Absorbing Clamp	R&S	MDS-21	100423	Mar. 20,2024	Mar. 19,2025	1 year

1.6.2 RADIATED TEST SITE

Item	Kind of Equipment	Manufacturer	Type No.	Serial No.	Last calibration	Calibrated until	Calibration period
1	Bilog Antenna	TESEQ	CBL6111D	31437	Mar. 20,2024	Mar. 19,2025	1 year
2	Test Cable	N/A	R-01	N/A	Mar. 20,2024	Mar. 19,2025	1 year
3	Test Cable	N/A	R-02	N/A	Mar. 20,2024	Mar. 19,2025	1 year
4	EMI Test Receiver	Rohde&Schwarz	ESVD	847312/008	Mar. 20,2024	Mar. 19,2025	1 year
5	Antenna Mast	EM	SC100_1	N/A	N/A	N/A	N/A
6	Turn Table	EM	SC100	060533	N/A	N/A	N/A

7	50Ω Switch	Anritsu Corp	MP59B	6200983705	Mar. 20,2024	Mar. 19,2025	1 year
8	SPECTRUM ANALYZER	Aglient	E4407B	160400005	Mar. 20,2024	Mar. 19,2025	1 year
9	HORN ANTENNA	EM	EM-AH-10180	2011071402	Mar. 20,2024	Mar. 19,2025	1 year
10	AMPLIFIER	EM	EM-30180	060536	Mar. 20,2024	Mar. 19,2025	1 year

1.6.3 ESD

Item	Kind of Equipment	Manufacturer	Type No.	Serial No.	Last calibration	Calibrated until	Calibration period
1	ESD TEST GENERATOR	SCHAFFNER	NSG438	858	Mar. 20,2024	Mar. 19,2025	1 year

1.6.4 RS

Item	Kind of Equipment	Manufacturer	Type No.	Serial No.	Last calibration	Calibrated until	Calibration period
1	Signal Generator	R&S	SMT 06	832080/007	Mar. 20,2024	Mar. 19,2025	1 year
2	Log-Bicon Antenna	Schwarzbeck	VULB9161	4022	Mar. 20,2024	Mar. 19,2025	1 year
3	Power Amplifier	AR	150W1000M1	320946	Mar. 20,2024	Mar. 19,2025	1 year
4	Microwave Horn Antenna	AR	AT4002A	321467	Mar. 20,2024	Mar. 19,2025	1 year
5	Power Amplifier	AR	25S1G4A	308598	Mar. 20,2024	Mar. 19,2025	1 year

.

1.7 DESCRIPTION OF TEST MODES

To investigate the maximum EMI emission characteristics generates from EUT, the test system was pre-scanning tested base on the consideration of following EUT operation mode or test configuration mode which possible have effect on EMI emission level. Each of these EUT operation mode(s) or test configuration mode(s) mentioned above was evaluated respectively.

Pretest Mode	Description
Mode 1	Power on
Mode 2	/

For Conducted Test	
Final Test Mode	Description
Mode 1	Power on
Mode 2	/

For Radiated Test	
Final Test Mode	Description
Mode 1	Power on
Mode 2	/

For EMS Test	
Final Test Mode	Description
Mode 1	Power on
Mode 2	/

2 - SYSTEM TEST CONFIGURATION

2.1 Justification

The system was configured for testing in a typical fashion (as normally used by a typical user).

2.2 EUT Exercise Software

The EUT exercising program used during radiated and conducted testing was designed to exercise the various system components in a manner similar to a typical use. The software offered by manufacture, can let the EUT being normal operation.

2.3 Special Accessories

Emission: The equipment under test (EUT) was configured to measure its highest possible radiation level. The test modes were adapted accordingly in reference to the Operating Instructions.

Immunity: The equipment under test (EUT) was configured to the representative operating mode and conditions.

2.4 Test Setup Diagram

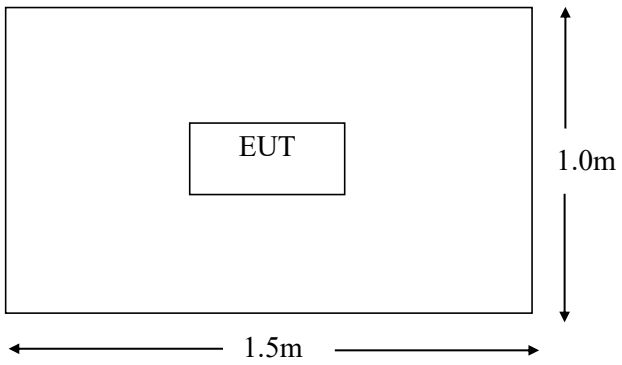

2.5 General Description of Test Auxiliary

EUT Cable List and Details			
Cable Description	Length (m)	Shielded/Unshielded	With / Without Ferrite
/		/	
/	/	/	/
/	/	/	/

3 - DISTURBANCE VOLTAGE AT THE MAINS TERMINALS

3.1 Measurement Uncertainty

All measurements involve certain levels of uncertainties, especially in field of EMC. The factors contributing to uncertainties are spectrum analyzer, cable loss, and LISN.

The Treatment of Uncertainty in EMC Measurements, the best estimate of the uncertainty of any conducted emissions measurement is 2.7 dB.

3.2 Limit of Disturbance Voltage At The Mains Terminals (Class B)

Frequency Range (MHz)	Limits (dBuV)	
	Quasi-Peak	Average
0.150～0.500	66～56	56～46
0.500～5.000	56	46
5.000～30.00	60	50

Note: (1) The tighter limit shall apply at the edge between two frequency bands.

3.3 EUT Setup

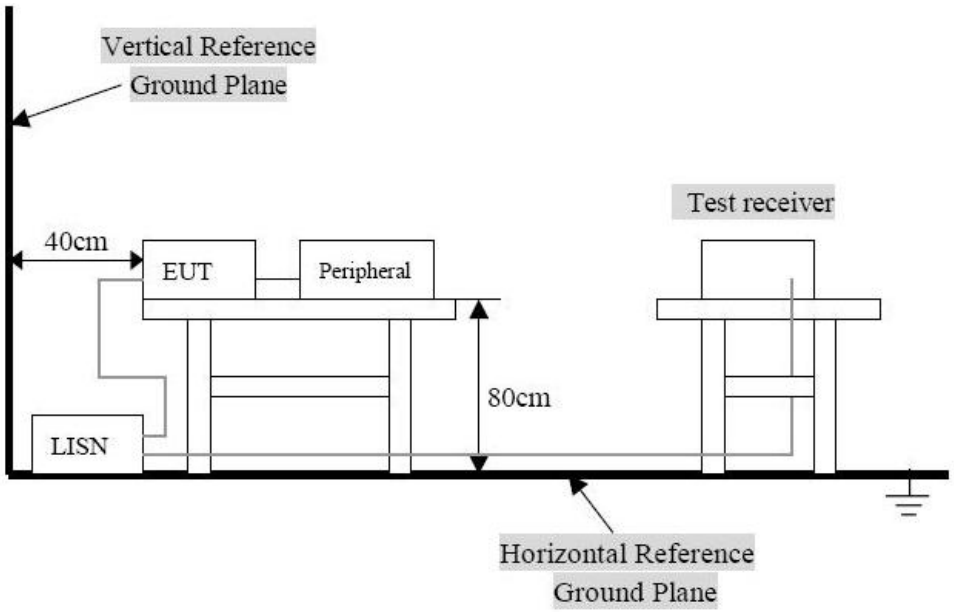

3.4 Instrument Setup

The test receiver was set with the following configurations:

Test Receiver Setting:

Frequency Range……150 KHz to 30 MHz
Detector……..Peak & Quasi-Peak & Average
Sweep Speed……Auto
IF Band Width…….…..9 KHz

3.5 Test Procedure

During the conducted emission test, the EUT power cord was connected to the auxiliary outlet of the first Artificial Mains.

Maximizing procedure was performed on the six (6) highest emissions to ensure EUT compliance using all installation combination.

All data was recorded in the peak detection mode. Quasi-peak and Average readings were only performed when an emission was found to be marginal (within -10 dB μ V of specification limits). Quasi-peak readings are distinguished with a "**QP**". Average readings are distinguished with a "**AV**".

3.6 Summary of Test Results

According to the data in section 3.6, the EUT complied with the EN 61000-6-3 Conducted margin, with the *worst* margin reading of:

3.7 Radiated Emissions Test Detail And Test Result

Conducted Emission Test

☐ Passed ☒ Not Applicable

Note: The EUT is DC supply, so this test item is not applicable.

4 - RADIATED DISTURBANCES

4.1 Measurement Uncertainty

All measurements involve certain levels of uncertainties, especially in field of EMC. The factors contributing to uncertainties are spectrum analyzer, cable loss, antenna factor calibration, antenna directivity, antenna factor variation with height, antenna phase center variation, antenna factor frequency interpolation, measurement distance variation, site imperfections, mismatch (average), and system repeatability.

The Treatment of Uncertainty in EMC Measurements, the best estimate of the uncertainty of a radiation emissions measurement is 4.5 dB.

4.2 Limit of Radiated Disturbances (Class B)

Frequency (MHz)	Distance (Meters)	Field Strengths Limits (dB μ V/m)
30 ~ 230	3	40
230 ~ 1000	3	47

Note: (1) The tighter limit shall apply at the edge between two frequency bands.
(2) Distance refers to the distance in meters between the test instrument antenna and the closest point of any part of the E.U.T.

4.3 EUT Setup

The radiated emission tests were performed in the open area 3-meter test site, using the setup accordance with the CISPR 16-1-1:2019, CISPR16-2-3:2016+A1:2019. The specification used was EN 61000-6-3 Class B limits.

The EUT was placed on the center of the test table.

Maximum emission emitted from EUT was determined by manipulating the EUT, support equipment, interconnecting cables and varying the mode of operation and the levels in the final result of the test were recorded with the EUT running in the operating mode that maximum emission was emitted.

Block diagram of test setup (In chamber)

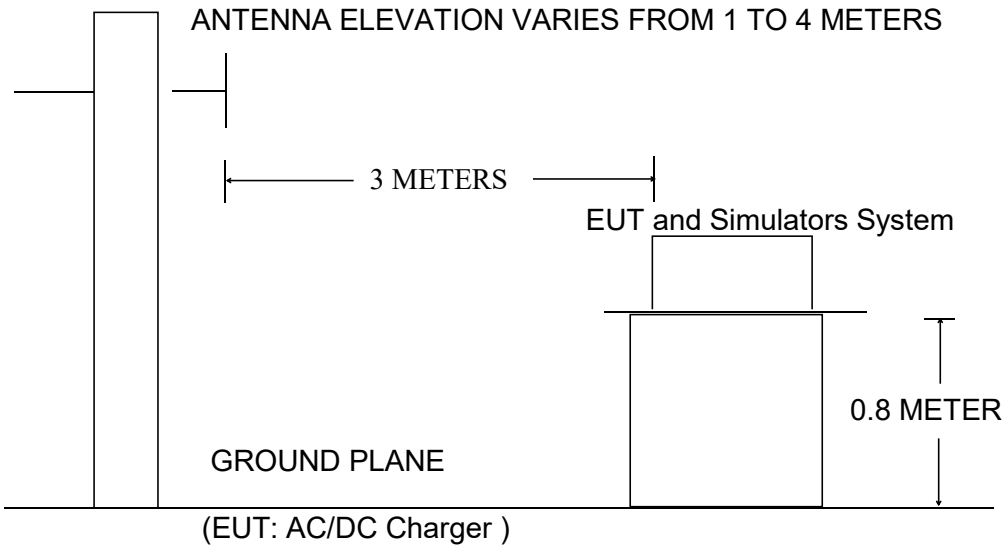

4.4 Test Receiver Setup

According to EN 61000-6-3 rules, the frequency was investigated from 30 to 1000 MHz. During the radiated emission test, the test receiver was set with the following configurations:

Test Receiver Setting:

Detector……..Peak & Quasi-Peak
IF Band Width……..…..120KHz
Frequency Range……30MHz to 1000MHz
Turntable Rotated……0 to 360 degrees

Antenna Position:

Height……..…1m to 4m
Polarity……....Horizontal and Vertical

4.5 Test Procedure

Maximizing procedure was performed on the highest emissions to ensure that the EUT complied with all installation combinations.
All data was recorded in the peak detection mode. Quasi-peak readings performed only when an emission was found to be marginal (within -10 dB μV of specification limits), and are distinguished with a "**QP**" in the data table.

4.6 Corrected Amplitude & Margin Calculation

The Corrected Amplitude is calculated by adding the Antenna Factor and Cable Factor, and subtracting the Amplifier Gain from the Amplitude reading. The basic equation is as follows:

Corr. Ampl. = Indicated Reading + Antenna Factor + Cable Factor - Amplifier Gain

The "**Margin**" column of the following data tables indicates the degree of compliance with the applicable limit. For example, a margin of 7dB μV means the emission is 7dB μV below the maximum limit for Class B. The equation for margin calculation is as follows:

Margin = Limit – Corr. Ampl.

4.7 Radiated Emissions Test Detail And Test Result

Radiated Emission Test Data of Below 1GHz

EUT：	Lithium Battery Energy Storage	Model Name：	SR-EOS15B
Temperature	24 ℃	Relative Humidity：	55%
Pressure：	1025hPa	Test Polarity :	Horizontal
Test Mode	Mode1	Test Voltage:	51.2V

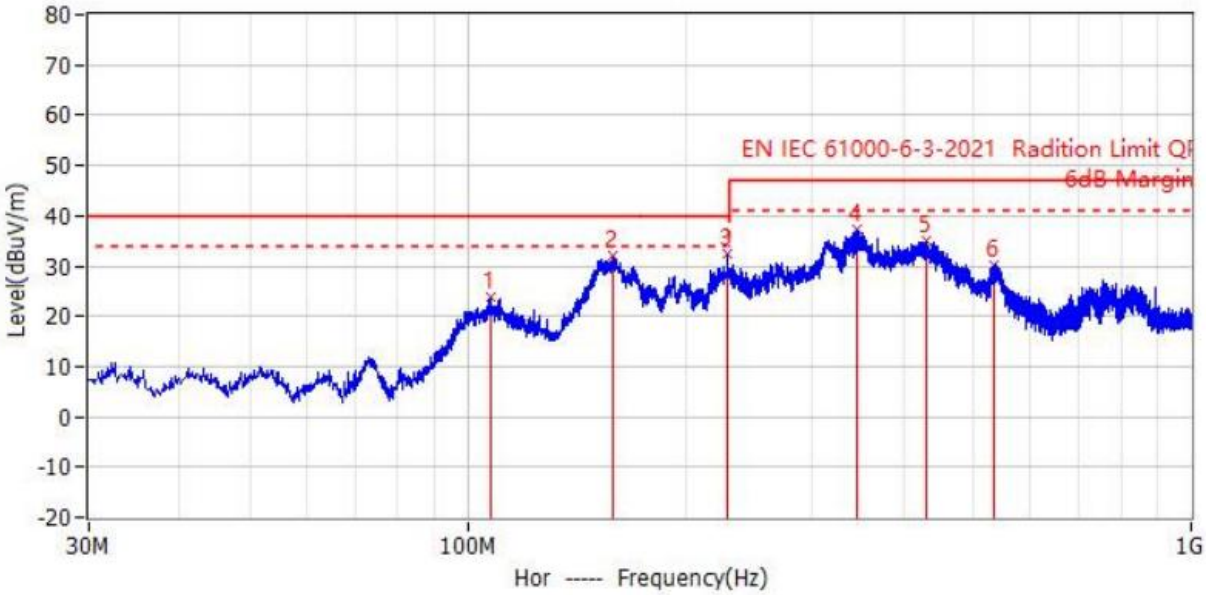

No.	Frequency	Limit dBuV/m	Level dBuV/m	Delta dB	Reading dBuV	Factor dB/m	Detector	Polar	Height cm	Angle deg
1*	107.964MHz	40.0	23.9	-16.1	42.9	-19.0	QP	Hor	100.0	305.0
2*	158.525MHz	40.0	32.0	-8.0	47.4	-15.4	QP	Hor	100.0	305.0
3*	228.850MHz	40.0	32.3	-7.7	50.4	-18.1	QP	Hor	100.0	166.0
4*	345.250MHz	47.0	37.2	-9.8	52.2	-15.0	QP	Hor	100.0	15.0
5*	430.125MHz	47.0	34.9	-12.1	47.7	-12.8	QP	Hor	100.0	105.0
6*	534.643MHz	47.0	30.3	-16.7	41.1	-10.8	QP	Hor	100.0	164.0

Radiated Emission Test Data of Below 1GHz

EUT：	Lithium Battery Energy Storage	Model Name：	SR-EOS15B
Temperature	24 ℃	Relative Humidity：	55%
Pressure：	1025hPa	Test Polarity :	Vertical
Test Mode	Mode1	Test Voltage:	51.2V

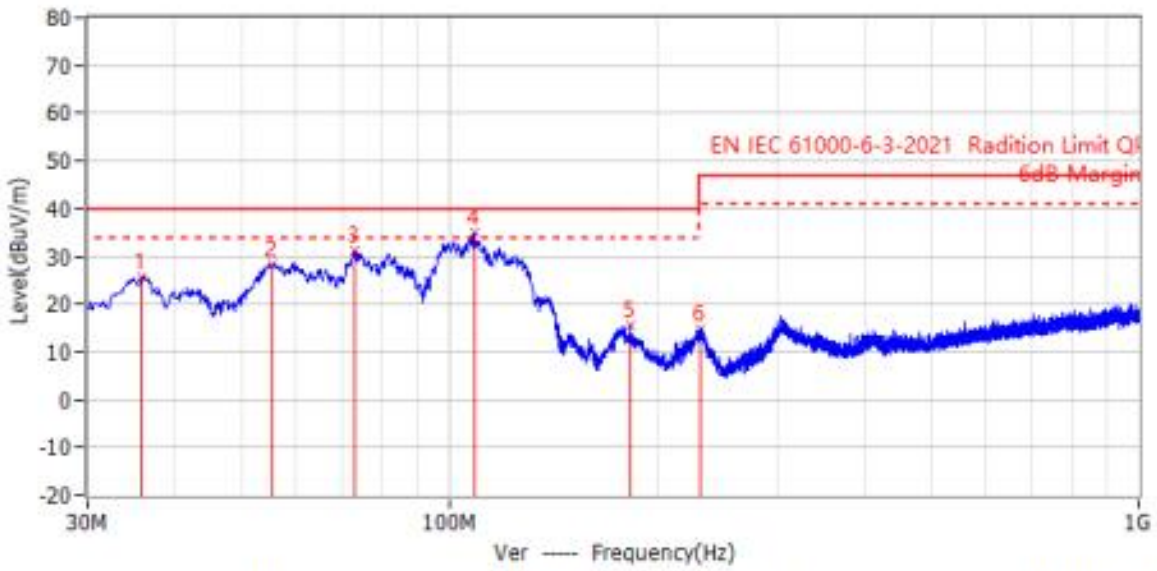

No.	Frequency	Limit dBuV/m	Level dBuV/m	Delta dB	Reading dBuV	Factor dB/m	Detector	Polar	Height cm	Angle deg
1*	35.941MHz	40.0	25.8	-14.2	40.2	-14.4	QP	Ver	100.0	13.0
2*	55.463MHz	40.0	28.5	-11.5	47.6	-19.1	QP	Ver	100.0	19.0
3*	73.044MHz	40.0	31.2	-8.8	53.0	-21.8	QP	Ver	100.0	68.0
4*	108.934MHz	40.0	34.9	-5.1	55.9	-21.0	QP	Ver	100.0	139.0
5*	183.260MHz	40.0	15.5	-24.5	35.7	-20.2	QP	Ver	100.0	257.0
6*	231.275MHz	47.0	14.8	-32.2	34.7	-19.9	QP	Ver	100.0	146.0

`

5– HARMONIC CURRENT TEST

5.1 Application of Harmonic Current Emission

Compliance to these standards ensures that tested equipment will not generate harmonic currents at levels that cause unacceptable degradation of the main environment. This directly contributes to meeting compatibility levels established in other EMC standards, which defines compatibility levels for low-frequency conducted disturbances in low-voltage supply systems.

5.2 Block Diagram of Test Setup:

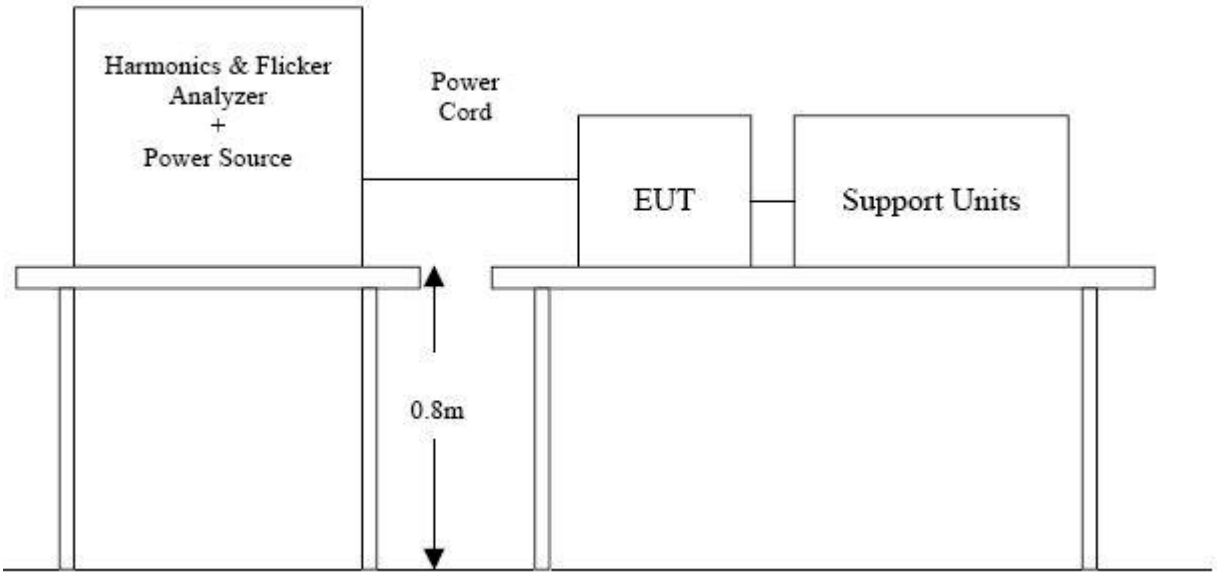

5.3 Test Procedure:

1. The EUT was placed on the top of a wooden table 0.8 meters above the ground and operated to produce the maximum harmonic components under normal operating conditions for each successive harmonic component in turn.
2. The correspondent test program of test instrument to measure the current harmonics emanated from EUT is chosen. The measure time shall be not less than the time necessary for the EUT to be exercised.

5.4 Test Result

Basic Standard:	EN IEC 61000-3-2:2019+A1:2021
Observation time	150s
Windows width:	10 periods - (EN 61000-4-7 Edition 2000)
Temperature:	24 (℃)
Humidity:	55 (%RH)
Atmospheric pressure:	101.1 (kPa)
Operating Mode:	Mode1
Test Result:	Pass
Note:	The EUT is DC supply, so this test item is not applicable, then this EUT could be deemed to comply with the requirements of EN IEC 61000-3-2:2019+A1:2021 without test.

6 – VOLTAGE FLUCTUATIONS AND FLICKER TEST

6.1 Application and Limit of Voltage Fluctuations and Flicker Test

Compliance to these standards ensures that tested equipment will not generate flickers and voltage change at levels that cause unacceptable degradation of the main environment. This directly contributes to meeting compatibility levels established in other EMC standards, which defines compatibility levels for low-frequency conducted disturbances in low-voltage supply systems.

Test Item	Limit	Remark
Pst	1.0	Pst means short-term flicker indicator.
Plt	0.65	Plt means long-term flicker indicator.
Tdt (ms)	500	Tdt means maximum time that dt exceeds 3 %.
dmax (%)	4%	dmax means maximum relative voltage change.
dc (%)	3.3%	dc means relative steady-state voltage change

6.2 Block Diagram of Test Setup:

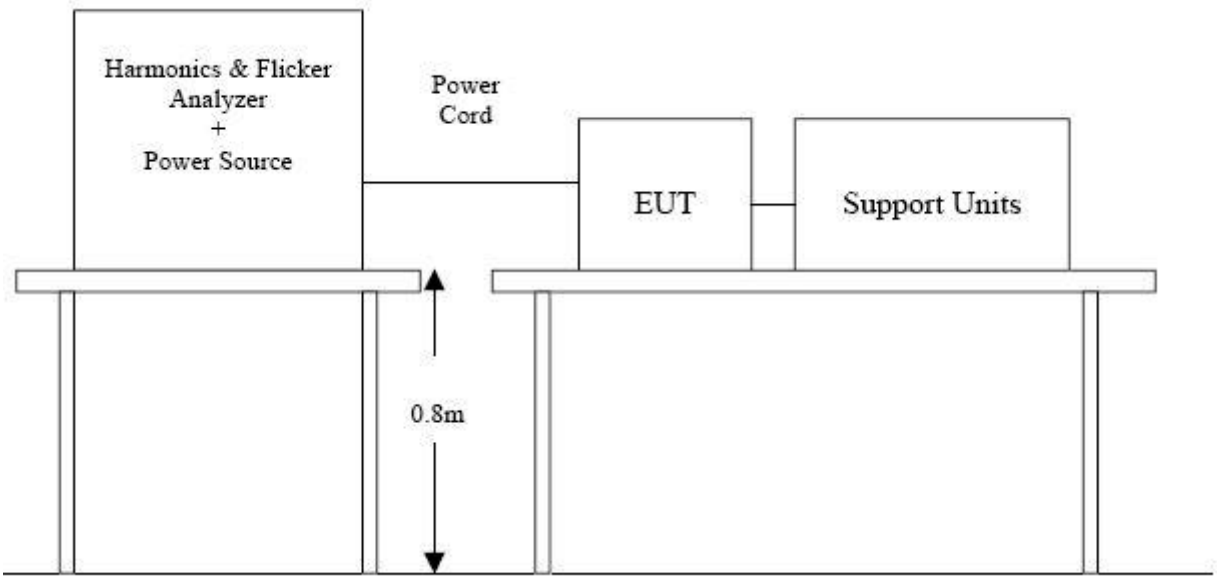

6.3 Test Procedure:

1. The EUT was placed on the top of a wooden table 0.8 meters above the ground and operated to produce the most unfavorable sequence of voltage changes under normal operating conditions.
2. During the flick measurement, the measure time shall include that part of whole operation cycle in which the EUT produce the most unfavorable sequence of voltage changes. The observation period for short-term flicker indicator is 10 minutes and the observation period for long-term flicker indicator is 2 hours.

6.4 Test Result

Basic Standard:	EN 61000-3-3:2013+A2:2021
Short time (Pst)	10 min
Observation time	10 min (1 Flicker measurement)
Temperature:	24 (℃)
Humidity:	55 (%RH)
Atmospheric pressure:	101.1 (kPa)
Operating Mode:	Mode1
Test Result:	Pass

Maximum Flicker results			
Test Item	**EUT values**	**Limit**	**Result**
Pst	/	1.000	Pass
dc [%]	/	3.300	Pass
dmax [%]	/	4.000	Pass
dt [ms]	/	500	Pass

7- IMMUNITY TEST DESCRIPTION

7.1 General Description

Product Standard	EN 61000-6-1	
Basic Standard, Specification, and Performance Criterion required	EN 61000-4-2	Electrostatic Discharge – ESD: ±8kV air discharge, ±4kV Contact discharge, Performance Criterion B
	EN 61000-4-3	Radio-Frequency Electromagnetic Field Susceptibility Test – RS: 80 ~ 1000 MHz, 3V/m, 80% AM (1kHz), Performance Criterion A
	EN 61000-4-4	Electrical Fast Transient/Burst - EFT, Power line: ±1kV, Signal line: ±0.5kV, Performance Criterion B
	EN 61000-4-5	Surge Immunity Test: 1.2/50 us Open Circuit Voltage, 8 /20 us Short Circuit Current, Power Line: line to line 1 kV, line to ground 2 kV Signal line: line to ground: outdoor: 1kV indoor: 0.5kV Performance Criterion B
	EN 61000-4-6	Conducted Radio Frequency Disturbances Test – CS: 0.15 ~ 80 MHz, 3Vrms, 80% AM, 1kHz, Performance Criterion A
	EN 61000-4-11	Voltage Dips: 1) 0% residual for 0.5 cycle, Performance Criterion B 2) 0% residual for 1 cycle, Performance Criterion B 3) 70% residual for 25/30 cycles for 50/60Hz, Performance Criterion C Voltage Interruptions: 0% residual for 250/300 cycles for 50/60Hz, Performance Criterion C is required for EUT with battery back-up Performance Criterion C is required for EUT without battery back-up

7.2 The phenomena allowed during and after test in each criterion are clearly stated in the following table

Performance criteria		
Criteria	**During test**	**After test**
A	Shall operate as intended. May show degradation of performance (see note1). Shall be no loss of function. Shall be no unintentional transmissions.	Shall operate as intended. Shall be no degradation of performance (see note 2). Shall be no loss of function. Shall be no loss of stored data or user programmable functions.
B	May show loss of function (one or more). May show degradation of performance (see note 1). No unintentional transmissions.	Functions shall be self-recoverable. Shall operate as intended after recovering. Shall be no degradation of performance (see note 2). Shall be no loss of stored data or user programmable functions.
C	May be loss of function (one or more).	Functions shall be recoverable by the operator. Shall operate as intended after recovering. Shall be no degradation of performance (see note 2).

NOTE 1:
Degradation of performance during the test is understood as a degradation to a level not below a minimum performance level specified by the manufacturer for the use of the apparatus as intended. In some cases the specified minimum performance level may be replaced by a permissible degradation of performance. If the minimum performance level or the permissible performance degradation is not specified by the manufacturer then either of these may be derived from the product description and documentation (including leaflets and advertising) and what the user may reasonably expect from the apparatus if used as intended.

NOTE 2:
No degradation of performance after the test is understood as no degradation below a minimum performance level specified by the manufacturer for the use of the apparatus as intended. In some cases the specified minimum performance level may be replaced by a permissible degradation of performance. After the test no change of actual operating data or user retrievable data is allowed. If the minimum performance level or the permissible performance degradation is not specified by the manufacturer then either of these may be derived from the product description and documentation (including leaflets and advertising) and what the user may reasonably expect from the apparatus if used as intended.

7.3 Deviations from the standard

No deviations from EN 61000-6-1 were made when performing the tests described in this report.

8- IMMUNITY TEST RESULTS

8.1 Electrostatic Discharge Immunity Test

8.1.1 Test Specification

Basic Standard:	EN 61000-4-2:2009
Test Level:	± 8 kV (Air Discharge) ± 4 kV (Contact Discharge) ± 4 kV (Indirect Contact HCP) ± 4 kV (Indirect Contact VCP)
Temperature:	23.6 (℃)
Humidity:	55 (%RH)
Atmospheric pressure:	101.1 (kPa)
Operating Mode:	Mode1
Operator:	Dong ShengXi

8.1.2 Test Setup

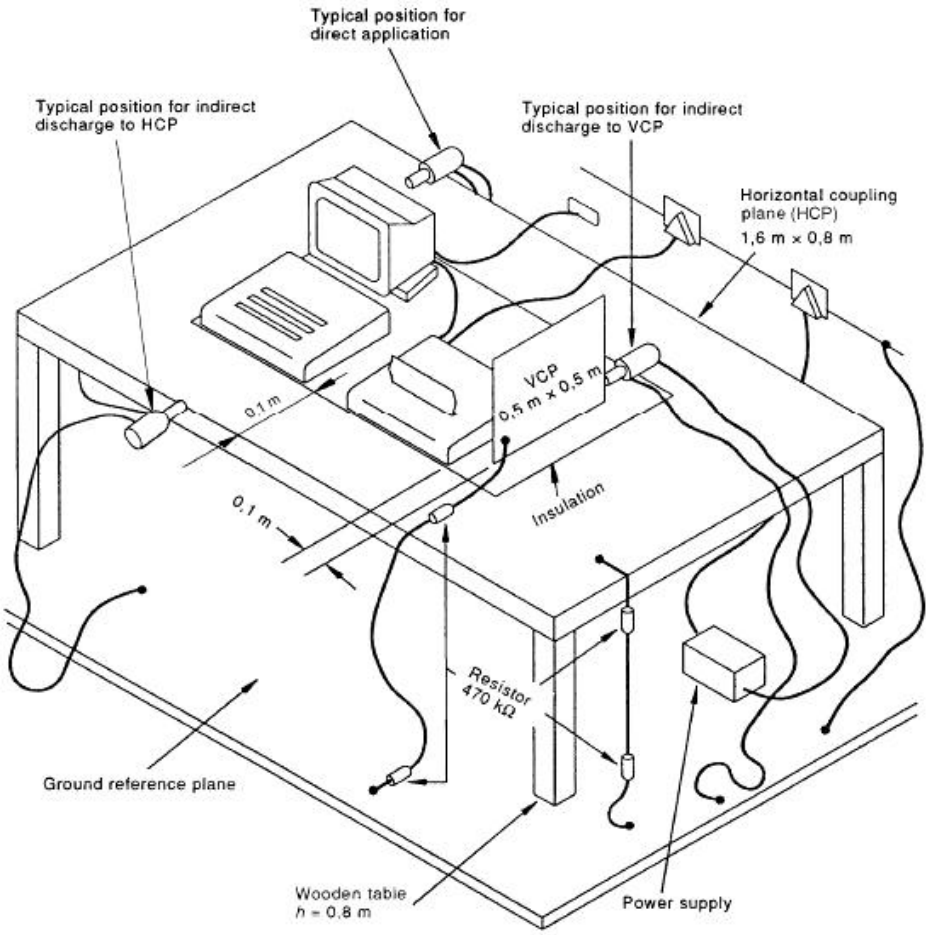

8.1.3 Test Procedure

1. Electrostatic discharges were applied only to those points and surfaces of the EUT that are accessible to users during normal operation.
2. The test was performed with at least ten single discharges on the pre-selected points in the most sensitive polarity.
3. The time interval between two successive single discharges was at least 1 second.
4. The ESD generator was held perpendicularly to the surface to which the discharge was applied and the return cable was at least 0.2 meters from the EUT.
5. Contact discharges were applied to the non-insulating coating, with the pointed tip of the generator penetrating the coating and contacting the conducting substrate.
6. Air discharges were applied with the round discharge tip of the discharge electrode approaching the EUT as fast as possible (without causing mechanical damage) to touch the EUT. After each discharge, the ESD generator was removed from the EUT and re-triggered for a new single discharge. The test was repeated until all discharges were complete.
7. At least ten single discharges (in the most sensitive polarity) were applied to the Horizontal Coupling Plane at points on each side of the EUT. The ESD generator was positioned horizontally at a distance of 0.1 meters from the EUT with the discharge electrode touching the HCP.
8. At least ten single discharges (in the most sensitive polarity) were applied to the center of one vertical edge of the Vertical Coupling Plane in sufficiently different positions that the four faces of the EUT were completely illuminated. The VCP (dimensions 0.5m x 0.5m) was placed vertically to and 0.1 meters from the EUT.

8.1.4 Performance Criterion Required & Test Result

Table 1: Electrostatic Discharge Immunity (Air Discharge)

Test Level			Test Points	Observation Performance	Criterion Required
±2 kV	±4kV	±8kV			
☐	☐	☒	Gap	B	B
☐	☐	☒	Port	B	B
☐	☐	☒	Led	B	B
☐	☐	☒	Other Port	B	B

Table 2: Electrostatic Discharge Immunity (Direct Contact)

Test Level			Test Points	Observation Performance	Criterion Required
±2 kV	±4kV	±8kV			
☐	☒	☐	Metal shell	B	B
☐	☒	☐	Screw	B	B
☐	☒	☐	Key	B	B

Table 3: Electrostatic Discharge Immunity (Indirect Contact HCP)

Test Level			Test Points	Observation Performance	Criterion Required
±2 kV	±4kV	±8kV			
☐	☒	☐	Front Side	A	B
☐	☒	☐	Back Side	A	B
☐	☒	☐	Left Side	A	B
☐	☒	☐	Right Side	A	B

Table 4: Electrostatic Discharge Immunity (Indirect Contact VCP)

Test Level			Test Points	Observation Performance	Criterion Required
±2 kV	±4kV	±8kV			
☐	☒	☐	Front Side	A	B
☐	☒	☐	Back Side	A	B
☐	☒	☐	Left Side	A	B
☐	☒	☐	Right Side	A	B

Test Result: Pass

8.2 Radiated Susceptibility Test

8.2.1 Test Specification

Basic Standard:	EN IEC 61000-4-3:2020
Frequency Range:	80~1000MHz
Modulation:	Amplitude 80%, 1kHz sinewave
Test Level:	3V/m
Temperature:	23.6 (℃)
Humidity:	55 (%RH)
Atmospheric pressure:	101.1 (kPa)
Operating Mode:	Mode1
Operator:	Harris Pan

8.2.2 Test Setup

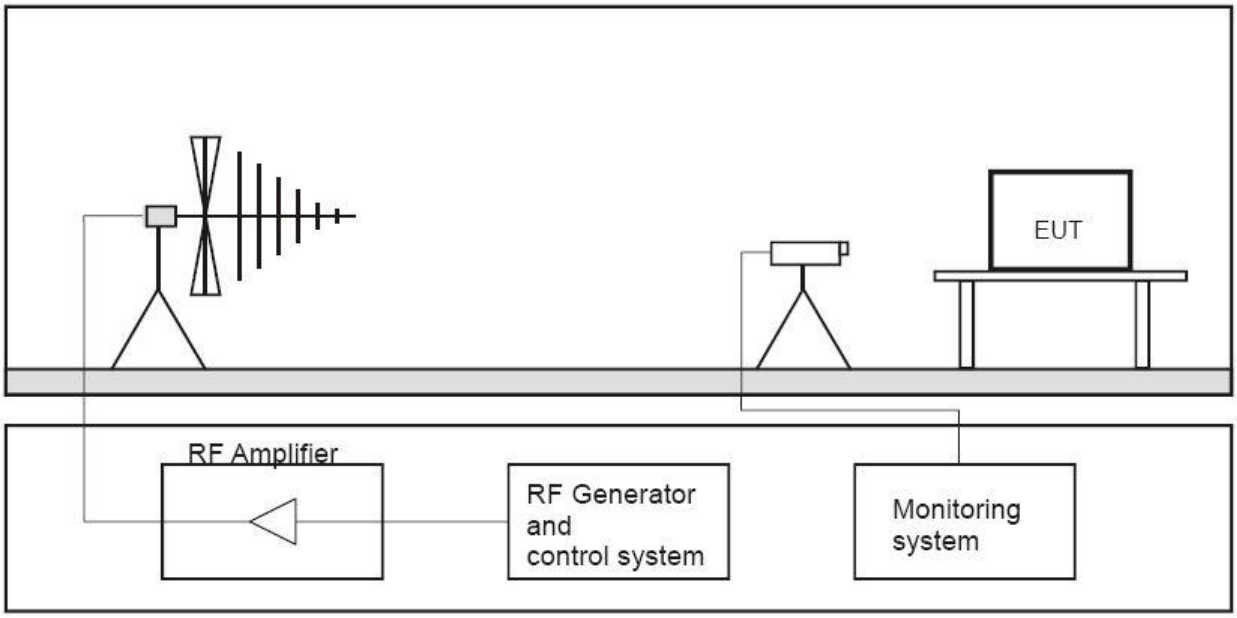

8.2.3 Test Procedure

1. The testing was performed in a fully-anechoic chamber.
2. The frequency range is swept from 80 MHz to 1000 MHz, with the signal 80% amplitude modulated with a 1kHz sine wave.
3. The dwell time at each frequency shall not be less than the time necessary for the EUT to be exercised and to respond, but shall in no case be less than 0,5s.
4. The field strength level was 3V/m.
5. The test was performed with the EUT exposed to both vertically and horizontally polarized fields on each of the four sides.

8.2.4 Performance Criterion Required & Test Result

Frequency Band (MHz)	Test Level	Test Points	Observation Performance	Criterion Required
80-1000	3V/m	Front Side	A	A
80-1000	3V/m	Rear Side	A	A
80-1000	3V/m	Left Side	A	A
80-1000	3V/m	Right Side	A	A

Test Result: Pass

8.3 Electrical Fast Transient/Burst Immunity Test

8.3.1Test Specification

Basic Standard :	EN 61000-4-4:2012
Test Level:	±1 kV for AC Power Line ±0.5 kV for Communication Line (If applicable)
Impulse Frequency:	5kHz
Impulse Wave-shape:	5/50ns
Burst Duration:	15ms
Burst Period:	300ms
Test Duration:	1 min.
Temperature:	24 (℃)
Humidity:	55 (%RH)
Atmospheric pressure:	101.1 (kPa)
Operating Mode:	Mode1

8.3.2 Test Setup

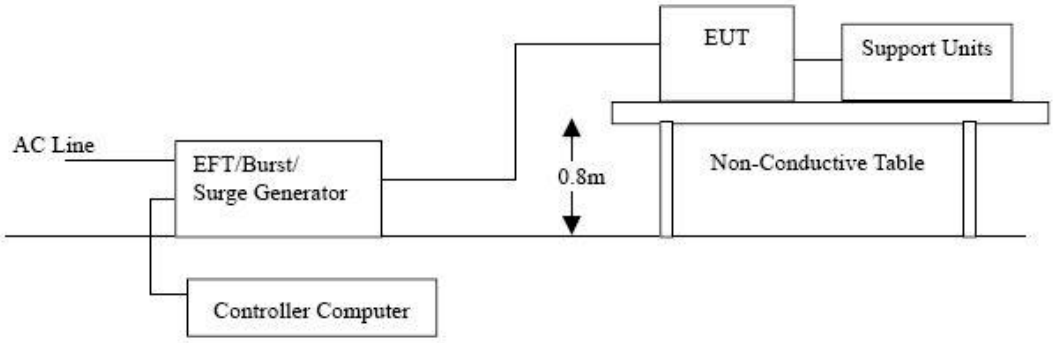

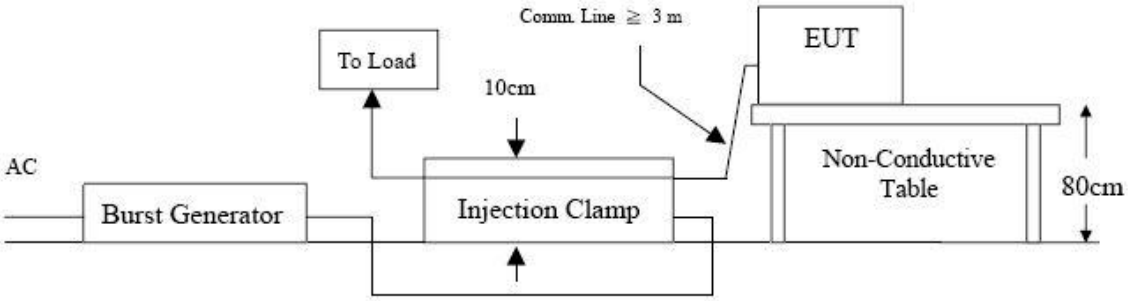

8.3.3 Test Procedure

1. Both positive and negative polarity discharges were applied.
2. The length of the “hot wire” from the coaxial output of the EFT generator to the terminals on the EUT should be 0.5m.
3. The duration time of each test sequential was 1 minute.
4. The transient/burst waveform was in accordance with EN 61000-4-4, 5/50ns.

8.3.4 Performance Criterion Required & Test Result

Voltage	Test Points	Observation Performance	Criterion Required
±1kV	/	A	B
±1kV	/	A	B
±1kV	/	A	B
±1kV	/	/	/
±1kV	/	A	B
±1kV	/	A	B
±1kV	/	A	B
±0.5kV	/	/	/
±0.5kV	/	/	/
±0.5kV	/	/	/

Test Result: Pass

☐ Passed ☒ Not Applicable

Note: The EUT is DC supply, so this test item is not applicable.

8.4 Surge Immunity Test

8.4.1 Test Specification

Basic Standard :	EN 61000-4-5:2014+A1:2017
Test Level:	±0.5, 1 kV (Line to Line) for AC Power Line ±0.5, 1, 2 kV (Line(s) to Ground) for AC Power Line ±0.5 kV for unshielded unsymmetrically operated interconnection lines (If applicable)
Wave-Shape:	Combination Wave 1.2/50 us Open Circuit Voltage 8/20 us Short Circuit Current
Generator Impedance:	42 ohm between signal line and ground 2 ohm between networks
Phase Angle:	0° /90°/180°/270°
Pulse Repetition Rate:	1 time / min
Number of Tests:	5 positive and 5 negative at selected points
Temperature:	24 (℃)
Humidity:	55 (%RH)
Atmospheric pressure:	101.1 (kPa)
Operating Mode:	Mode1

8.4.2 Test Setup

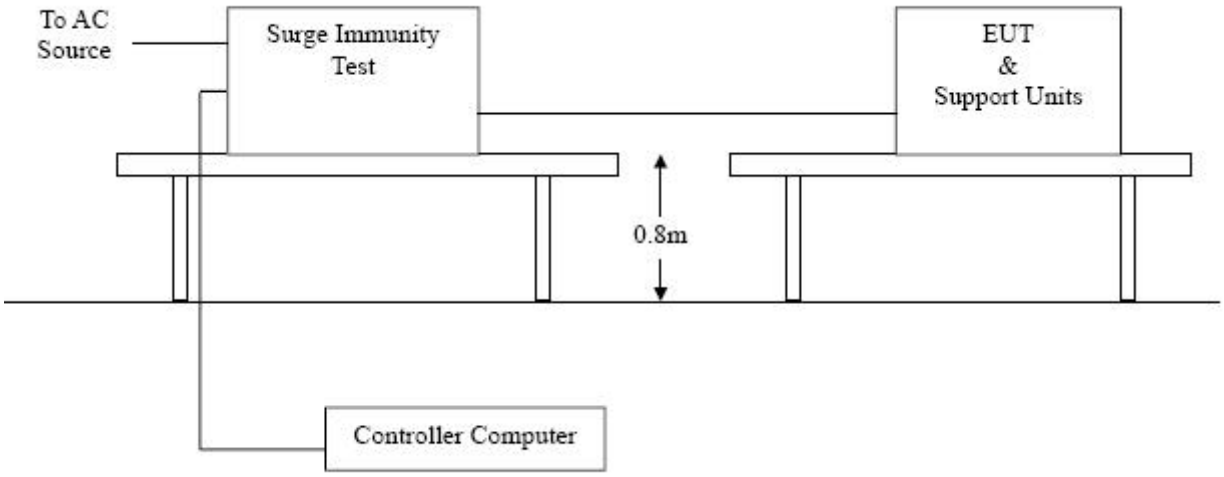

8.4.3 Test Procedure

1. For EUT Lithium Battery Energy Storage:
   The surge is applied to the EUT Lithium Battery Energy Storage terminals via the capacitive coupling network. Decoupling networks are required in order to avoid possible adverse effects on equipment not under test that may be powered by the same lines, and to provide sufficient decoupling impedance to the surge wave. The power cord between the EUT and the coupling/decoupling networks was shorter than 2 meters in length.
2. For test applied to unshielded unsymmetrically operated interconnection lines of EUT: (If applicable)
   The surge was applied to the lines via the capacitive coupling. The coupling / decoupling networks didn't influence the specified functional conditions of the EUT. The interconnection line between the EUT and the coupling/decoupling networks was shorter than 2 meters in length.

8.4.4 Performance Criterion Required & Test Result

Voltage	Test Points	Observation Performance	Criterion Required
±0.5kV	/	/	/
±1kV	/	A	B
±2kV	/	A	B
±4kV	/	A	B
±0.5kV	/	/	/
±0.5kV	/	/	/
±0.5kV	/	/	/

Test Result: Pass

☐ Passed ☒ Not Applicable

Note: The EUT is DC supply, so this test item is not applicable.

8.5 Conducted Susceptibility Test

8.5.1 Test Specification

Basic Standard:	EN 61000-4-6:2014+AC:2015
Test Level:	3Vr.m.s
Frequency Range:	0.15~80MHz
Modulation:	Amplitude 80%, 1kHz sinewave
Frequency Step:	1 % of preceding frequency value
Temperature:	24 (℃)
Humidity:	55 (%RH)
Atmospheric pressure:	101.1 (kPa)
Operating Mode:	Mode1
Operator:	Dong ShengXi

8.5.2 Test Setup

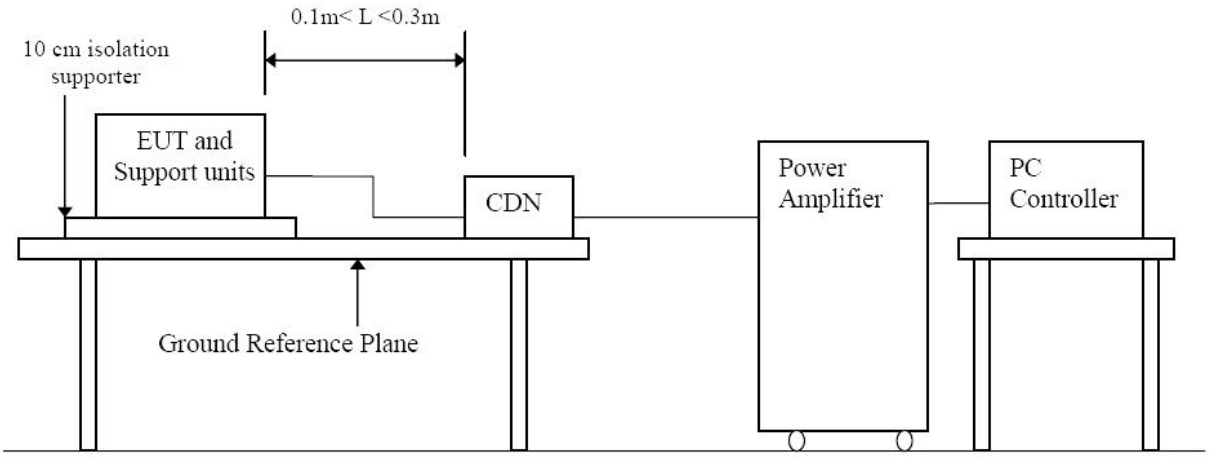

8.5.3 Test Procedure

1. The test was performed with the test generator connected to each of the coupling and decoupling devices in turn, while the other non-excited RF input ports of the coupling devices are terminated by a 50-ohm load resistor.
2. The frequency range was swept from 150 kHz to 80 MHz, using the signal level established during the setting process and with a disturbance signal of 80 % amplitude. The signal was modulated with a 1 kHz sine wave, pausing to adjust the RF signal level or the switch coupling devices as necessary. The sweep rate was 1.5 x 10-3 decades/s. Where the frequency range is swept incrementally, the step size was 1 % of preceding frequency value from 150 kHz to 80 MHz.

3. The dwell time at each frequency was less than the time necessary for the EUT to be exercised, and able to respond. Sensitive frequencies such as clock frequency(ies) and harmonics or frequencies of dominant interest, was analyzed separately.
4. Attempts was made to fully exercise the EUT during testing, and to fully interrogate all exercise modes selected for susceptibility.

8.5.4 Performance Criterion Required & Test Result

Frequency Band (MHz)	Voltage (Vrms)	Test Points	Observation Performance	Criterion Required
0.15-80	3	/	A	A

Test Result: Pass

☐ Passed ☒ Not Applicable

Note: The EUT is DC supply, so this test item is not applicable.

8.6 Voltage Dips, Short Interruptions Immunity Tests

8.6.1 Test Specification

Basic Standard:	EN IEC 61000-4-11:2020/AC:2022
Test Level:	Voltage Dips: 1) 0% residual voltage for 0.5 cycle, 2) 0% residual voltage for 1 cycle, 3) 70% residual voltage for 25/30 cycles, Voltage Interruptions: 0% residual voltage for 250/300 cycles
Interval between event:	10 seconds
Phase Angle:	0°/180°
Test cycle:	3 times
Temperature:	24 (℃)
Humidity:	55 (%RH)
Atmospheric pressure:	101 (kPa)
Operating Mode:	Mode1

8.6.2 Test Setup

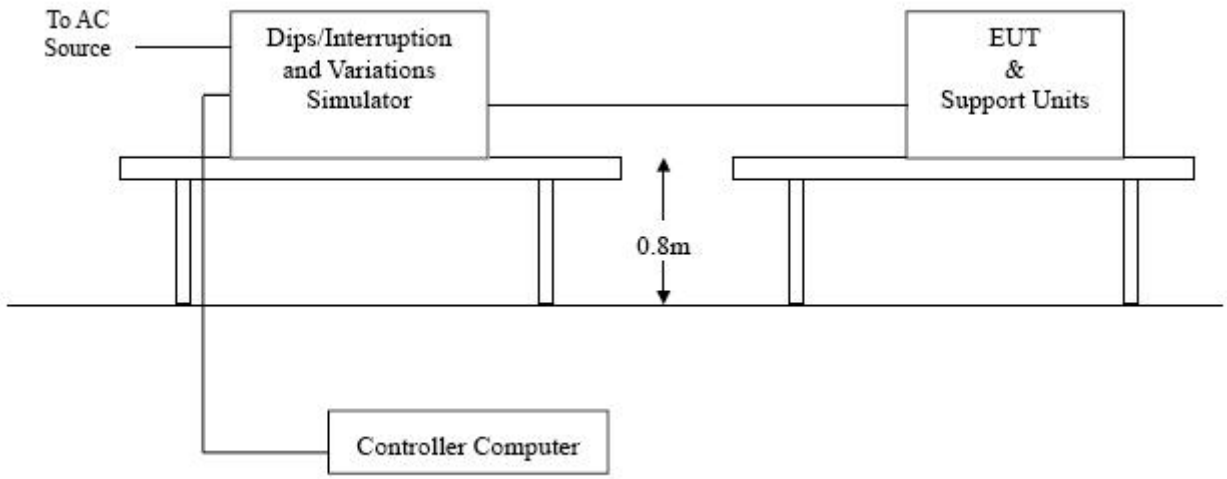

8.6.3 Test Procedure

The EUT was tested for each selected combination of test levels and duration with a sequence of 3 dips/interruptions with intervals of 10s (between each test event). Each representative mode of operation shall be tested. Abrupt changes in supply voltage shall occur at zero crossings of the voltage waveform.

8.6.4 Performance Criterion Required & Test Result

Ut: 230V AC, 50Hz			
Voltage (% Residual)	**Duration (Period)**	**Observation Performance**	**Criterion Required**
0	0.5	/	B
0	1	/	B
70	25	/	C
0	250	/	C

Ut: 230V AC, 60Hz			
Voltage (% Residual)	**Duration (Period)**	**Observation Performance**	**Criterion Required**
0	0.5	/	B
0	1	/	B
70	30	/	C
0	300	/	C

Test Result: Pass

☐ Passed ☒ Not Applicable

Note: The EUT is DC supply, so this test item is not applicable.

APPENDIX A - EUT PHOTOGRAPHS

EUT view ☒ Whole ☐ Rear ☐ Right ☐ Left ☐ Top ☐ Bottom ☐ Internal	

EUT view ☒ Whole ☐ Rear ☐ Right ☐ Left ☐ Top ☐ Bottom ☐ Internal	

EUT view	
☒ Whole ☐ Rear ☐ Right ☐ Left ☐ Top ☐ Bottom ☐ Internal	

Statement

1.This report is considered invalid without approved signature and special;

2.The Applicant name and Address, the sample(s) and sample information was/were provided by the applicant who should be responsible for the authenticity which SiCT hasn’t verified;

3.The result(s) shown in this report refer(s) only to the sample(s) tested;

4.Without written approval of SiCT, this report can’t be reproduced except in full.

---END OF REPORT ---