Solar Hybrid Inverter

User Manual

Product models:

HESP4840S100-H | HESP4846S100-H | HESP4850S100-H

HESP4855S100-H | HESP4860S100-H

Important safety instructions

Please keep this manual for future use.

This manual contains all safety, installation and operating instructions for the HESP series solar hybrid inverter.

Please read all instructions and precautions in the manual carefully before installation and use.

- Non-safety voltage exists inside the solar hybrid inverter. To avoid personal injury, users shall not disassemble the solar hybrid inverter themselves. Contact our professional maintenance personnel if there is a need for repair.
- Do not place the solar hybrid inverter within the reach of children.
- Do not install the solar hybrid inverter in harsh environments such as moist, oily, flammable or explosive, or heavily dusty areas.
- The mains input and AC output are high voltage, so please do not touch the wiring terminals.
- The housing of the solar hybrid inverter is hot when it is working. Do not touch it.
- Do not open the terminal protective cover when the solar hybrid inverter is working.
- It is recommended to attach proper fuse or circuit breaker to the outside of the solar hybrid inverter.
- Always disconnect the fuse or circuit breaker near the terminals of PV array, mains and battery before installing and adjusting the wiring of the solar hybrid inverter.
- After installation, check that all wire connections are tight to avoid heat accumulation due to poor connection, which is dangerous.
- The solar hybrid inverter is off-grid. It is necessary to confirm that it is the only input device for load, and it is forbidden to use it in parallel with other input AC power to avoid damage.

CONTENTS

1. GENERAL INFORMATION 4

1.1 PRODUCT OVERVIEW AND FEATURES 4
1.2 BASIC SYSTEM INTRODUCTION 5
1.3 APPEARANCE 6
1.4 DIMENSION DRAWING 7

2. INSTALLATION INSTRUCTIONS 8

2.1 INSTALLATION PRECAUTIONS 8
2.2 WIRING SPECIFICATIONS AND CIRCUIT BREAKER SELECTION 9
2.3 INSTALLATION AND WIRING 11
2.4 PARALLEL MACHINE WIRE CONNECTION 17
2.4.1 Introduction 17
2.4.2 Precautions for connecting the parallel connecting lines 17
2.4.3 Schematic diagram of parallel connection in single phase 19
2.4.4 Schematic diagram of parallel connection in three phase 22

3. OPERATING MODES 27

3.1 CHARGING MODE 27
3.2 OUTPUT MODE 28

4. LCD SCREEN OPERATING INSTRUCTIONS 29

4.1 OPERATION AND DISPLAY PANEL 29
4.2 OPERATION BUTTONS INTRODUCTION 29
4.3 INDICATORS INTRODUCTION 29
4.4 LCD SCREEN INTRODUCTION 30
4.5 SETUP PARAMETERS DESCRIPTION 33
4.6 BATTERY TYPE PARAMETERS 43

5. OTHER FUNCTIONS 45

5.1 DRY CONTACT 45
5.2 RS485 COMMUNICATION PORT 45
5.3 USB COMMUNICATION PORT 45
5.4 CAN COMMUNICATION FUNCTION 45
5.5 PARALLEL COMMUNICATION FUNCTION (PARALLEL) 46

6. PROTECTION 46

6.1 PROTECTIONS PROVIDED 46
6.2 FAULT CODE 48
6.3 HANDLING MEASURES FOR PART OF FAULTS 52

7.TROUBLESHOOTING 54

8. TECHNICAL PARAMETERS 55

1. General information

1.1 Product overview and features

HESP series is a new solar hybrid inverter, which integrates solar energy storage & mains charging energy storage and AC sine wave output. Thanks to DSP control and advanced control algorithm, it has high response speed, high reliability and high industrial standard. Four charging modes are optional, i.e. Only Solar, Mains Priority, Solar Priority and Mains & Solar hybrid charging; and two output modes are available, i.e. Inverter and Mains, to meet different application requirements.

The solar charging module applies the latest optimized MPPT technology to quickly track the maximum power point of the PV array in any environment and obtain the maximum energy of the solar panel in real time.

Through a state of the art control algorithm, the AC-DC charging module realizes fully digital voltage and current double closed loop control, with high control precision in a small volume. Wide AC voltage input range and complete input/output protections are designed for stable and reliable battery charging and protection.

Based on full-digital intelligent design, the DC-AC inverter module employs advanced SPWM technology and outputs pure sine wave to convert DC into AC. It is ideal for AC loads such as household appliances, power tools, industrial equipment, and electronic audio and video equipment. The product comes with a segment LCD design which allows real-time display of the operating data and status of the system. Comprehensive electronic protections keep the entire system safer and more stable.

Features:

1. With time-slot charging and discharging function, it can cut in and out of mains charging at different times, and switch between battery discharging and mains bypass power supply mode at different times.
2. Anti-backflow grid connection function (hybrid photovoltaic mains supply).
3. With insulation resistance and leakage current detection.
4. Supports battery-free operation.
5. Dual activation with lithium battery, triggered by either mains or photovoltaic power supply.
6. Power saving mode available to reduce no-load loss.
7. Available in 4 charging modes: Only Solar, Mains Priority, Solar Priority and Mains & Solar hybrid charging.
8. Two output modes: mains bypass and inverter output, with uninterrupted power supply function.
9. 360 ° all-around protection with a number of protection functions.
10. Supports lead-acid and lithium battery access.
11. ON/OFF switch controls inverter AC output.
12. Grid-connected PV mode can be set.
13. Fully digital voltage and current double closed loop control with advanced SPWM technology for pure sine wave output.
14. Advanced MPPT technology with an efficiency of 99.9%.
15. Designed with a LCD screen and 3 LED indicators for dynamic display of system data and operating status.
16. Intelligent variable speed fan efficiently dissipate heat and extend system life.
17. Complete protections, including short circuit protection, over voltage and under voltage protection, overload protection, reverse protection, etc.

1.2 Basic system introduction

The figure below shows the system application scenario of this product. A complete system consists of the following parts:

1. PV module: Convert light energy into DC power, and charge the battery through the solar hybrid inverter, or directly invert into AC power to drive the load.

2. Mains or generator: Connected at the AC input, to power the load while charging the battery. If the mains or generator is not connected, the system can also operate normally, and the load is powered by the battery and PV module.

3. Battery: Provided to ensure normal power supply to the system loads when solar energy is insufficient and the Mains is not connected.

4. Household load: Allow connection of various household and office loads, including refrigerators, lamps, TVs, fans and air conditioners.

5. Solar hybrid inverter: The energy conversion unit of the whole system.

Specific system wiring method depends on the actual application scenario.

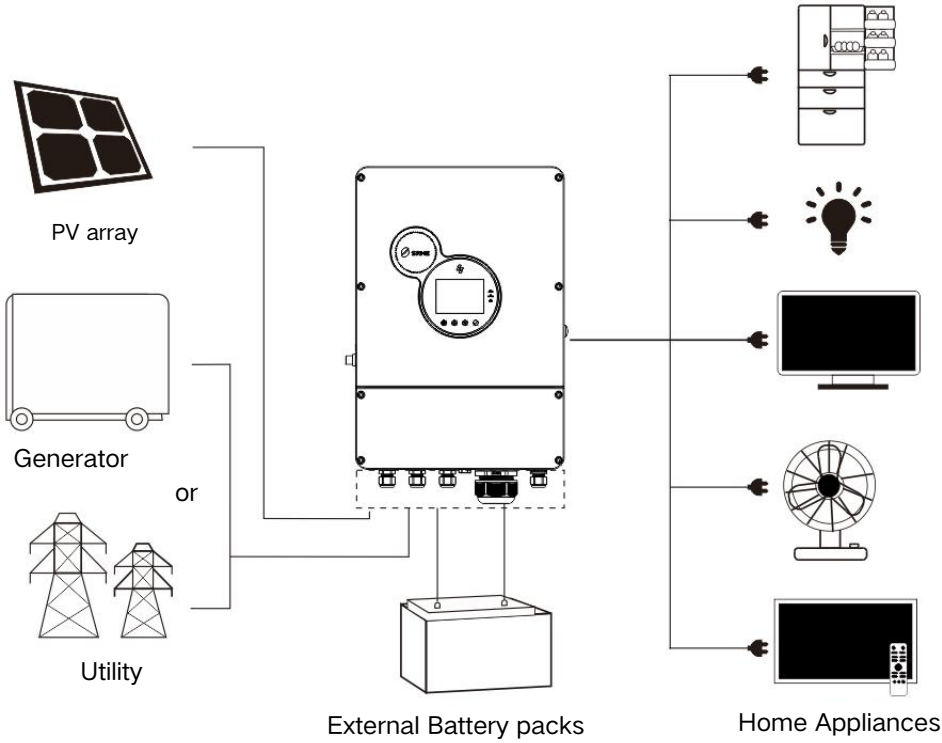

1.3 Appearance

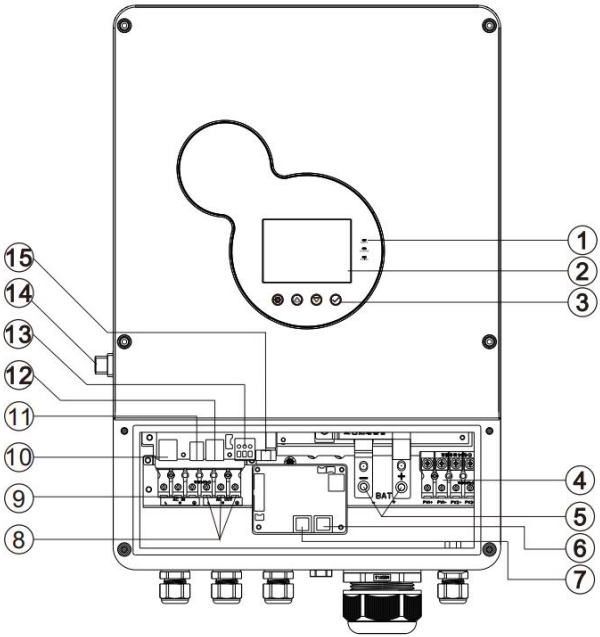

①	Indicator light	⑨	AC input
②	LCD screen	⑩	RS485-2 Communication Port
③	Touch button	⑪	USB communication port
④	PV terminal	⑫	RS485-1 Communication Port (WIFI / GPRS)
⑤	Battery terminal	⑬	Dry-contact port
⑥	Parallel communication A port	⑭	Overload protector
⑦	Parallel communication B port	⑮	CAN communication port
⑧	AC output		

1.4 Dimension drawing

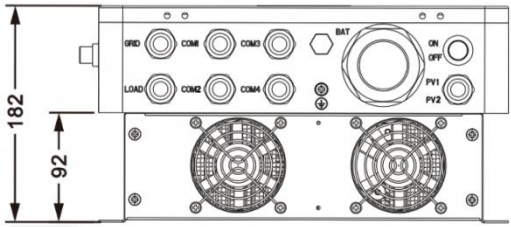

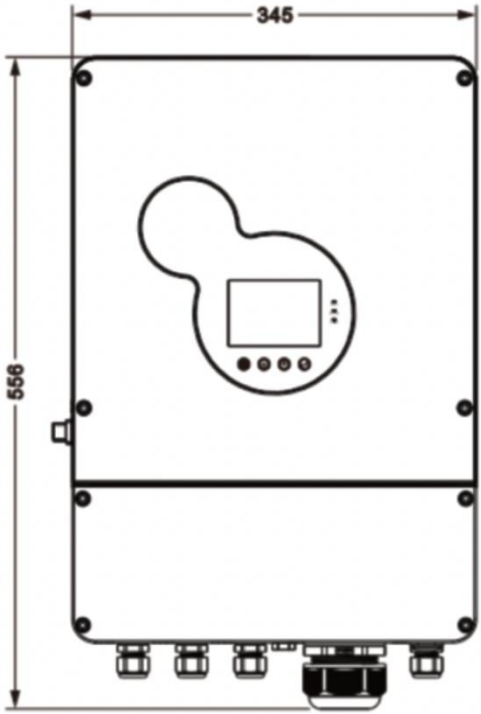

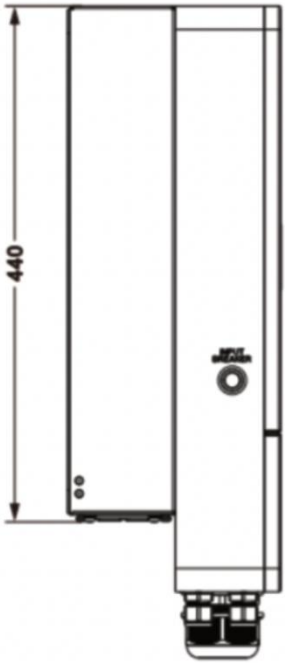

2. Installation instructions

2.1 Installation precautions

Please read this manual carefully prior to installation to familiarize yourself with the installation steps.

- Be very careful when installing the battery. Wear safety goggles when installing a lead-acid liquid battery. Once coming into contact with the battery acid, rinse with clean water timely.
- Do not place metal objects near the battery to prevent short-circuit of the battery.
- Acid gas may be generated when the battery is charged. So, please ensure good ventilation.
- When installing the cabinet, be sure to leave enough space around the solar hybrid inverter for heat dissipation. Do not install the solar hybrid inverter and lead-acid battery in the same cabinet to avoid corrosion by acid gas generated during battery operation.
- Only the battery that meets the requirements of the solar hybrid inverter can be charged.
- Poorly connected connections and corroded wires may cause great heat which will melt the wire insulation, burn the surrounding materials, and even cause fires. So, make sure the connectors have been tightened, and the wires are secured with ties to avoid looseness of connections caused by shaking of wires during mobile application.
- The system connection wires are selected according to a current density of not more than 5 A/mm^2.
- Even after the power is turned off, there is still high voltage inside the unit. Do not open or touch the internal components, and avoid related operations until the capacitor completely discharges.
- Do not install the solar hybrid inverter in harsh environments such as moist, oily, flammable or explosive, or heavily dusty areas.
- Polarity at the battery input end of this product shall not be reversed, otherwise it may damage the device or cause unpredictable danger.
- The mains input and AC output are high voltage, so please do not touch the wiring terminals.
- When the fan is working, do not touch it to prevent injury.
- Load equipment input power needs to confirm that this solar hybrid inverter is the only input device, and it is forbidden to use in parallel with other input AC power to avoid damage.

2.2 Wiring specifications and circuit breaker selection

Wiring and installation must comply with national and local electrical codes.
Recommended PV array wiring specifications and circuit breaker selection: Since the output current of the PV array is affected by the type, connection method and illumination angle of the PV module, the minimum wire diameter of the PV array is calculated according to its short-circuit current; refer to the short-circuit current value in the PV module specification (the short-circuit current is constant when the PV modules are connected in series; the short-circuit current is the sum of the short-circuit currents of all PV modules connected in parallel); the short-circuit current of the PV array shall not exceed the maximum input current.

- **Refer to the table below for PV input wire diameter and switch:**

Models	Recommended PV wiring diameter	Maximum PV input current	Recommended circuit breaker type
HESP4840S100-H	$6mm^2$/10AWG	16A / 16A	2P—25A
HESP4846S100-H	$6mm^2$/10AWG	16A / 16A	2P—25A
HESP4850S100-H	$6mm^2$/10AWG	16A / 16A	2P—25A
HESP4855S100-H	$6mm^2$/10AWG	16A / 16A	2P—25A
HESP4860S100-H	$6mm^2$/10AWG	16A / 16A	2P—25A

Note: The voltage in series shall not exceed the maximum PV input open circuit voltage.

- **Refer to the table below for recommended AC input wire diameter and switch:**

Models	Recommended AC input wiring diameter	Maximum bypass input current	Recommended circuit breaker type
HESP4840S100-H	$10mm^2$/7AWG	40A	2P—40A
HESP4846S100-H	$10mm^2$/7AWG	40A	2P—40A
HESP4850S100-H	$10mm^2$/7AWG	40A	2P—40A
HESP4855S100-H	$10mm^2$/7AWG	40A	2P—40A
HESP4860S100-H	$10mm^2$/7AWG	40A	2P—40A

Note: There is already an appropriate circuit breaker at the Mains input wiring terminal, so it is not necessary to add one more.

- Recommended battery input wire diameter and switch selection

Models	Recommended battery wiring diameter	Rated battery discharge current	Maximum charge current	Recommended circuit breaker type
HESP4840S100-H	30mm^2/2AWG	100A	100A	2P—160A
HESP4846S100-H	30mm^2/2AWG	118A	100A	2P—160A
HESP4850S100-H	30mm^2/2AWG	125A	100A	2P—200A
HESP4855S100-H	30mm^2/2AWG	130A	100A	2P—200A
HESP4860S100-H	30mm^2/2AWG	135A	100A	2P—200A

- Recommended AC output wiring specifications and circuit breaker selection

Models	Recommended AC output wiring diameter	Rated inverter AC output current	Maximum bypass output current	Recommended circuit breaker type
HESP4840S100-H	10mm^2/7AWG	17.4A	40A	2P—40A
HESP4846S100-H	10mm^2/7AWG	20A	40A	2P—40A
HESP4850S100-H	10mm^2/7AWG	24A	40A	2P—40A
HESP4855S100-H	10mm^2/7AWG	24A	40A	2P—40A
HESP4860S100-H	10mm^2/7AWG	26A	40A	2P—40A

Note: The wiring diameter is for reference only. If the distance between the PV array and the solar hybrid inverter or the distance between the solar hybrid inverter and the battery is relatively long, using a thicker wire can reduce the voltage drop to improve system performance.

Note: The above are only recommended wiring diameter and circuit breaker. Please select the appropriate wiring diameter and circuit breaker according to actual situations.

2.3 Installation and wiring

Installation steps:

Step 1: Determine the installation position and the space for heat dissipation. Determine the installation position of the solar hybrid inverter, such as wall surface; when installing the solar hybrid inverter, ensure that there is enough air flowing through the heat sink, and space of at least 200mm to the left and right air outlets and 500mm to the above and below air outlets of the inverter shall be left to ensure natural convection heat dissipation. Refer to the installation diagram of the whole machine as above.

Warning: Danger of explosion! Never install the solar hybrid inverter and lead-acid battery in the same confined space! Also do not install in a confined place where battery gas may collect.

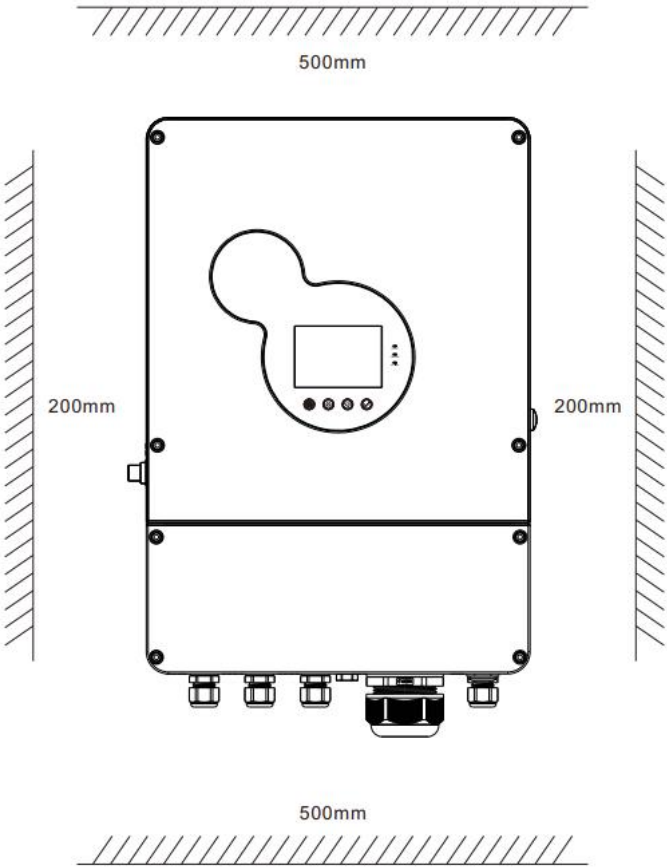

Step 2: Open 4 holes in the wall according to the following dimensions, and knock in expansion screws, as shown in the following figure:

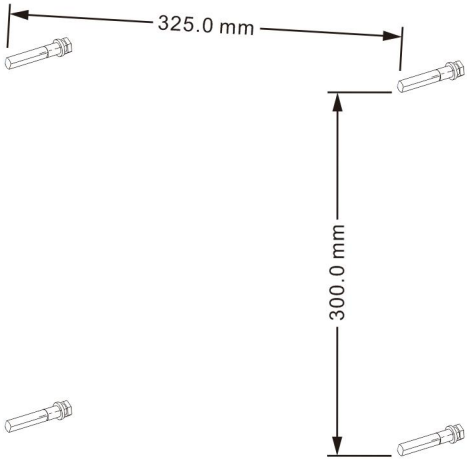

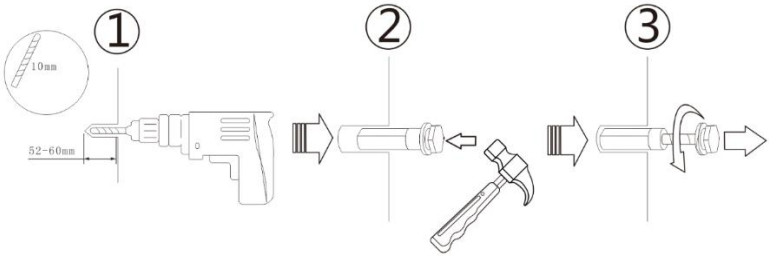

Step 3: Hang up the machine and tighten the screws.

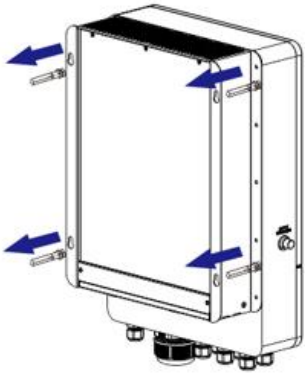

Step 4: Remove the terminal cover

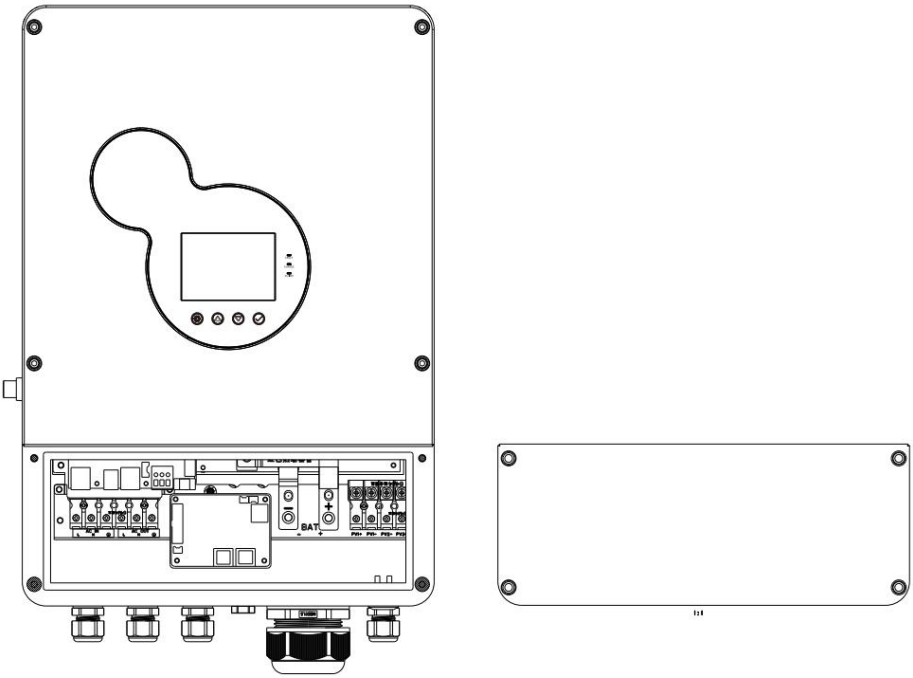

Step5: Connect the Wire. (Note: The wire shall penetrate into the corresponding joint before crimping the terminal)

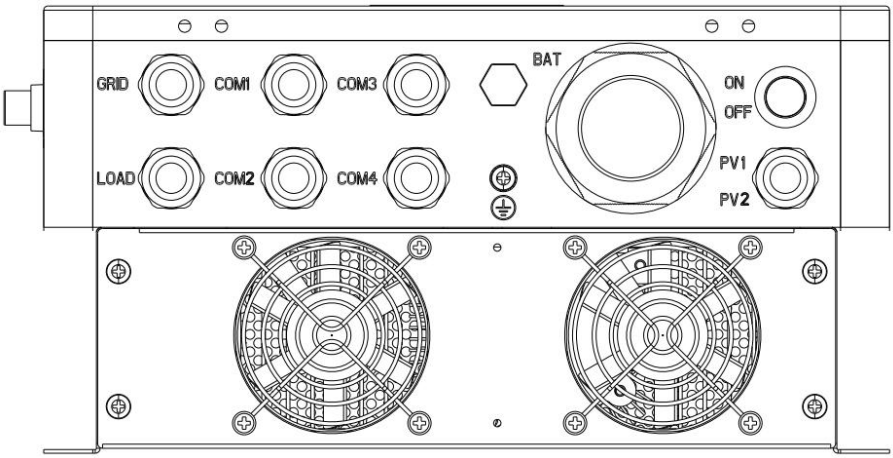

Connection method of AC I/O:

① Prior to AC I/O wiring, disconnect the external circuit breaker and confirm whether the cable used is thick enough. Please refer to Chapter "2.2 Wiring Specification and Circuit Breaker Selection";

② According to the cable sequence and terminal position shown in the following figure, connect the AC input line properly, please connect the grounding wire first, then connect the live wire and the neutral wire;

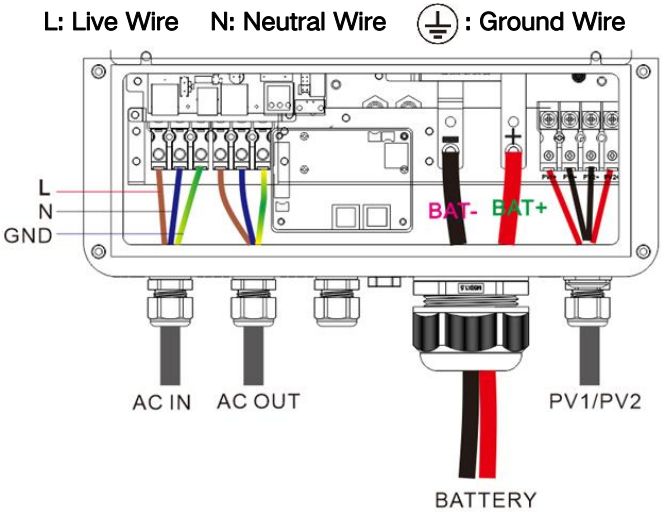

③ Connect the AC output line properly according to the cable sequence and terminal position shown in the above figure. Please connect the ground wire first, then the live wire and the neutral wire.

Wiring Method of PV Input:

① Prior to wiring, disconnect the external circuit breaker and confirm whether the cable used is thick enough. Please refer to Chapter "2.2 Wiring Specification and Circuit Breaker Selection";

② According to the cable sequence and terminal position shown in the following figure, connect the PV input line properly.

BAT Wiring Method:

① Prior to wiring, disconnect the external circuit breaker and confirm whether the cable used is thick enough. Please refer to Chapter "2.2 Wiring Specification and Circuit Breaker Selection". BAT wire shall be connected with the machine through O-terminal. It is recommended to use O-terminal with inner diameter of 7mm. The O-terminal must firmly compress BAT wire to prevent excessive heating caused by excessive contact impedance;

② According to the cable sequence and terminal position shown in the following figure, connect the BAT wire properly.

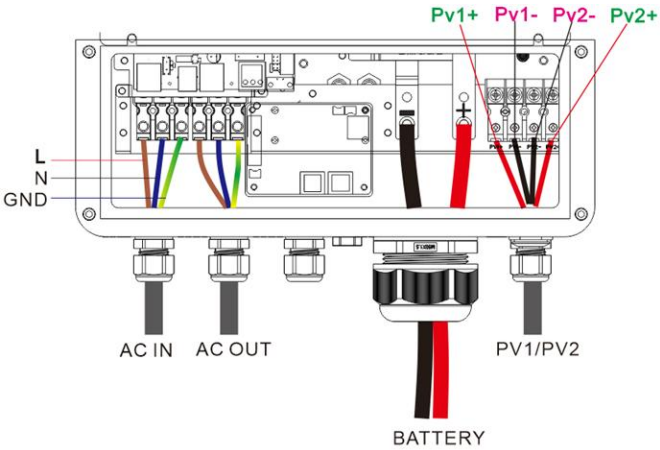

Ground Wire of the Entire Machine:

As shown in the following figure, it is located on the bottom of the chassis and shall be be connected by O-terminal. It is recommended to use O-terminal with inner diameter of 6mm.

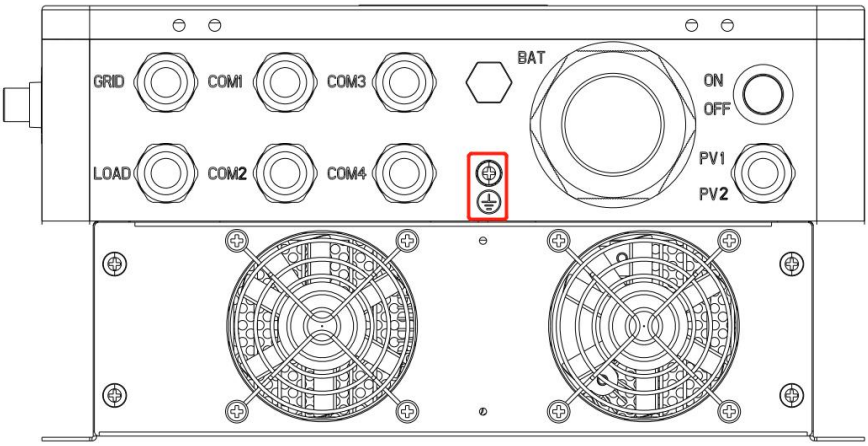

Note: As far as possible, the ground cable should be much thicker as possible (the sectional area of wire should not be less than 4mm^2) and the grounding point should be kept close to the inverter as possible. The ground wire shall be shorter as possible.

Warning:

① Mains input, AC output and PV array will generate high voltage. So, before wiring, be sure to opening the circuit breaker or fuse;

② Pay attention to safety in the process of wiring. Do not close the circuit breaker or fuse and ensure the "+" and "-" pole leads of each component be connected properly in the process of

wiring; the circuit breaker must be installed at the battery end. Please refer to Chapter 2.2 “Wiring Specification and Circuit Breaker Selection” for their selection. Before wiring, please be sure to disconnect the circuit breaker to prevent strong electric spark in the process of wiring and avoid short-circuiting the battery in the process of wiring. If the inverter is applied in area with frequent lightning, it is recommended to install an external surge protection device at PV input.

Step 6: Check whether wires are connected properly and firmly, especially check whether the positive and negative of the battery input are reversely connected, whether the positive and negative of PV input are reversely connected and whether the AC input is improperly connected to the AC output.

Step 7: Tighten the waterproof joint cover and close the machine cover back.

Step 8: Start the inverter. First close the circuit breaker at the battery end, then press the circular ON/OFF switch on the right of the machine.

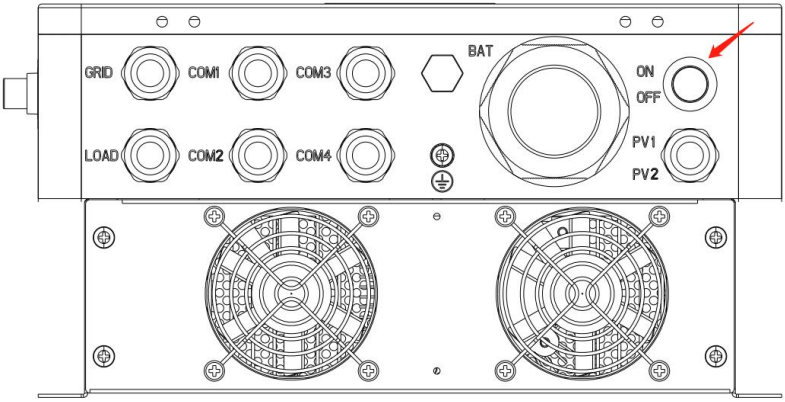

The flashing of "AC/INV" indicator lamp indicates that the inverter works normally. Close the circuit breaker of PV array and mains power again. Finally, open the AC load one by one after the AC output is normal so as to avoid protection action caused by major instantaneous impact caused by opening the load at the same time and ensure that the inverter work normally in the preset mode.

Note: If power is supplied to different AC loads, it is recommended to turn on the load with high impulse current first, and then turn on the load with small impulse current till the load can work stably.

Note: If the inverter is not working properly or the LCD or indicator light displays abnormally, please refer to Chapter 6 for troubleshooting.

2.4 Parallel machine wire connection

2.4.1 Introduction

1. Up to six units connected in parallel.
2. When using the parallel operation function, the following connecting lines (package accessories) shall be firmly and reliably connected:

Parallel communication line*1:

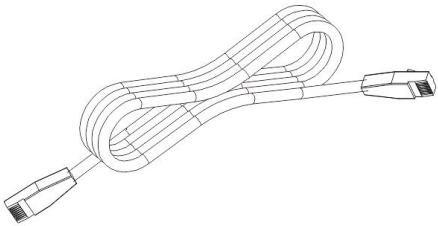

2.4.2 Precautions for connecting the parallel connecting lines

Warning:

1. **PV connection:**

   When connected in parallel, the PV arrays of each machine must be independent and the PV arrays of PV1 and PV2 of each machine must also be independent.

2. **Battery wiring:**

   Parallel connection in single or three-phase: ensure that all solar hybrid inverters are connected to the same battery, with BAT + connected to BAT + , BAT - connected to BAT -, and that the connection is correct with the same wiring length and line diameter before power on, so as to avoid the abnormal operation of parallel system output caused by wrong connection.

3. **AC OUT wiring:**

   Parallel connection in single phase: ensure L-to-L, N-to-N and PE-to-PE connection for all solar hybrid inverters, and that the connection is correct with the same wiring length and line diameter before power on, so as to avoid the abnormal operation of parallel system output caused by wrong connection. For specific wiring, please refer to 2.4.3 Wiring Diagram.

   Parallel connection in three-phase: ensure N-to-N and PE-to-PE connection for all solar hybrid inverters. The L lines of all inverters connected to the same phase need to be connected together. But L lines of different phases cannot be joined together. Other

connection precautions are the same as parallel connection in single phase. For specific wiring, please refer to 2.4.4 Wiring Diagram.

4. **AC IN wiring**:

Parallel connection in single phase: ensure L-to-L, N-to-N and PE-to-PE connection for all solar hybrid inverters, and that the connection is correct with the same wiring length and line diameter before power on, so as to avoid the abnormal operation of parallel system output caused by wrong connection. Meanwhile, it is not allowed to have multiple different AC source inputs to avoid damage to the external equipment of the inverter. The consistency and uniqueness of AC source input shall be ensured. For specific wiring, please refer to 2.4.3 Wiring Diagram.

Parallel connection in three-phase: ensure N-to-N and PE-to-PE connection for all solar hybrid inverters. The L lines of all inverters connected to the same phase need to be connected together. But L lines of different phases cannot be joined together. Other connection precautions are the same as parallel connection in single phase. For specific wiring, please refer to 2.4.4 Wiring Diagram.

5. **Wiring of parallel communication line**:

Our parallel communication cable is a shielded 8Pin network connection cable, which can be used for single-phase or three-phase parallel connection. Each machine must be connected with one out and one in. This means that the machine "Parallel_A" is connected to the machine to be parallelized "Parallel_B", and that the machine "Parallel_A" is not allowed to connect to the "Parallel_B". "Parallel_B" or "Parallel_A" is connected to the machine to be parallelized "Parallel_A". At the same time, the parallel communication cable of each machine should be fastened with 8Pin network connection cable to avoid disconnection or poor contact of the parallel communication cable, which may cause abnormal operation or damage to the system output.

6. Before and after connecting the system, please check the following system wiring diagrams in detail to ensure that all wiring is correct and reliable before powering on.

7. After the system is wired, powered on and in normal operation, if a new inverter needs to be connected, make sure to disconnect the battery input, PV input, AC input and AC output, and that all solar hybrid inverters are powered off before reconnecting into the system.

2.4.3 Schematic diagram of parallel connection in single phase

1. The parallel communication line and current sharing detection line of the solar hybrid inverter need to be locked with screws after connecting. The schematic diagram is as follows:

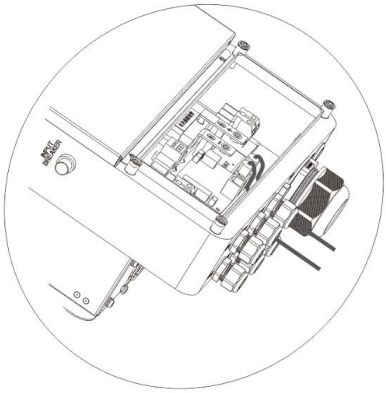

2. In case of parallel operation with multiple inverters, the schematic diagram of parallel connection is as follows:

   a) **Two solar hybrid inverters of the system connected in parallel:**

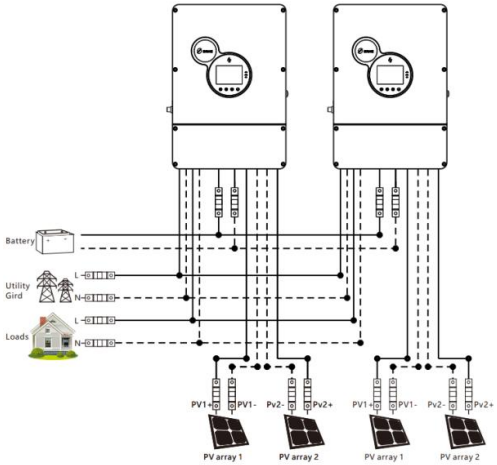

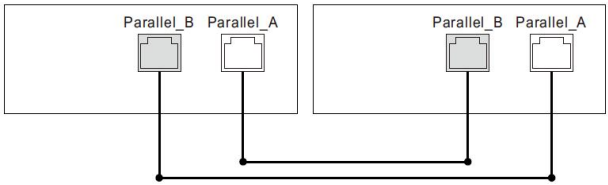

b) Three solar hybrid inverters of the system connected in parallel:

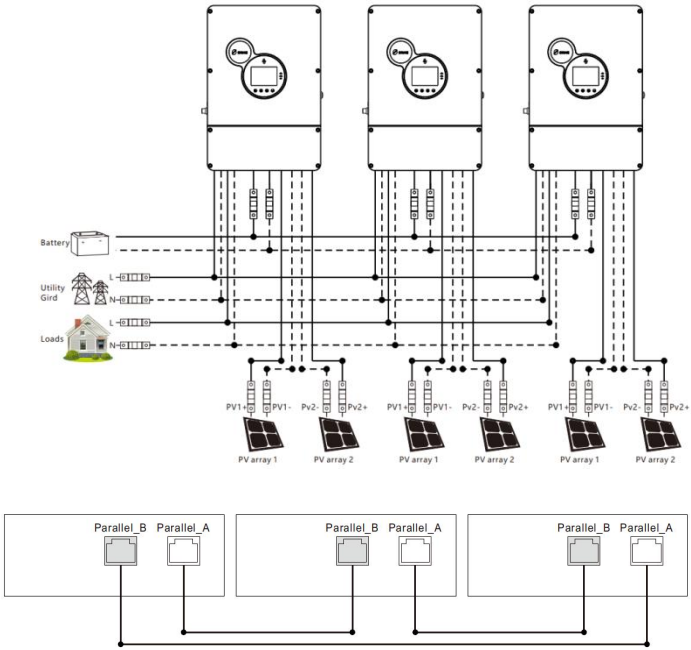

c) Four solar hybrid inverters of the system connected in parallel:

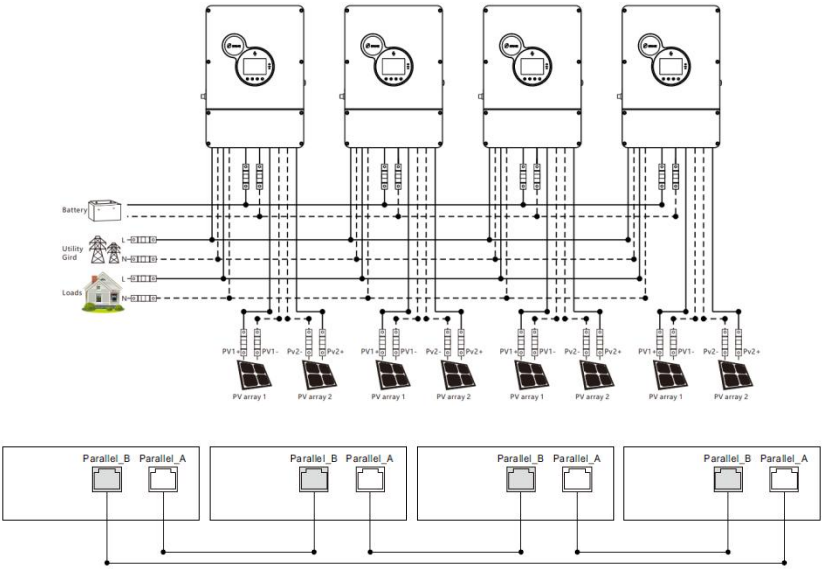

d) Five solar hybrid inverters of the system connected in parallel:

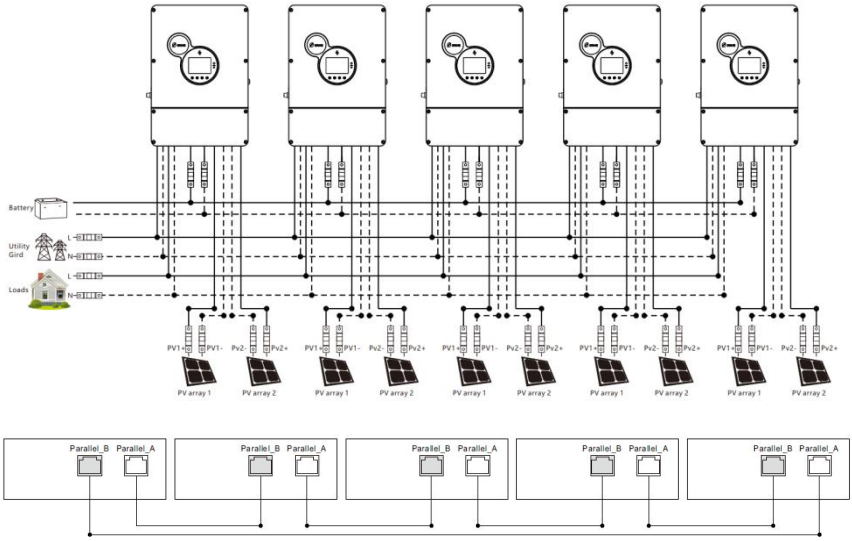

e) Six solar hybrid inverters of the system connected in parallel:

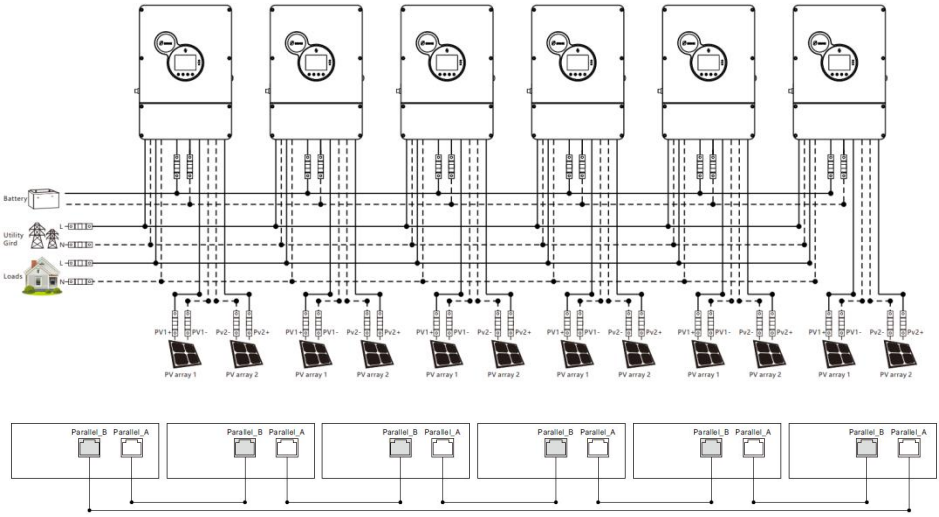

2.4.4 Schematic diagram of parallel connection in three phase

1. The parallel communication line and current sharing detection line of the solar hybrid inverter need to be locked with screws after connecting. The schematic diagram is as follows:

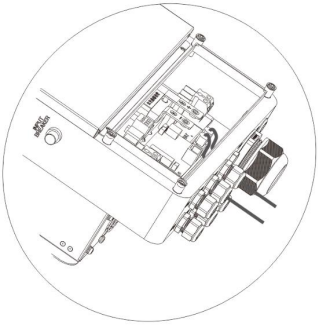

2. In case of parallel operation with multiple inverters, the schematic diagram of parallel connection is as follows:

Parallel Operation in three phase :

a) **Three solar hybrid inverters of the system connected in three phase:**

1+1+1 system:

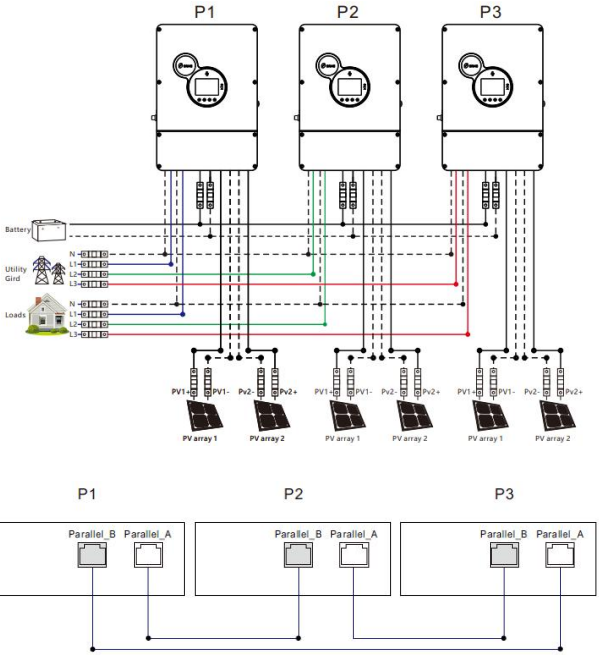

b) Four solar hybrid inverters of the system connected in three phase:

2+1+1 system:

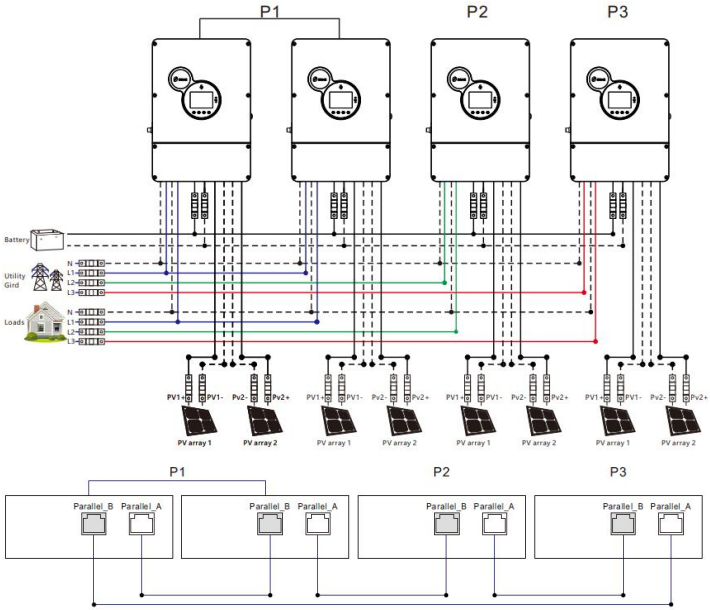

c) Five solar hybrid inverters of the system connected in three phase:

3+1+1 system:

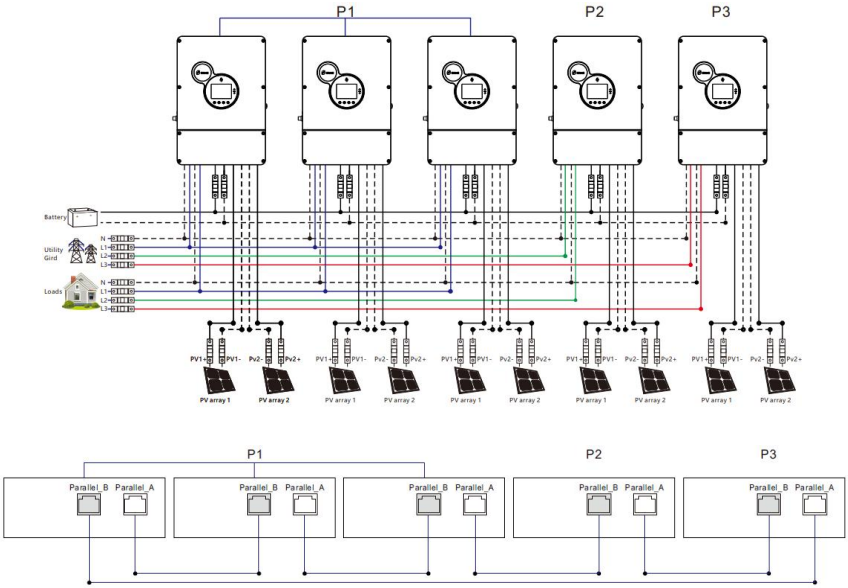

2+2+1 system:

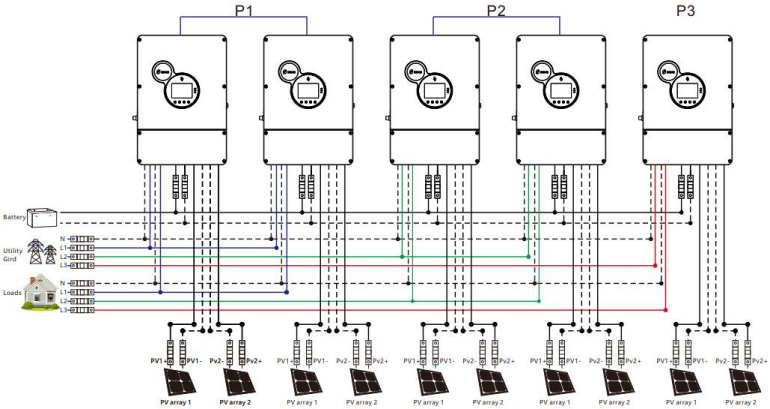

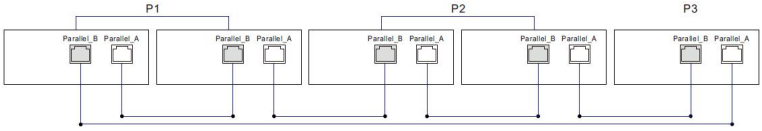

d) Six solar hybrid inverters of the system connected in three phase:

2+2+2 system:

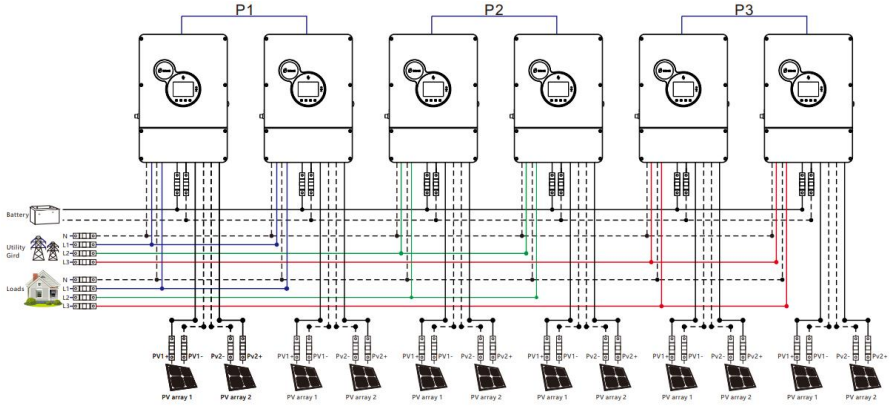

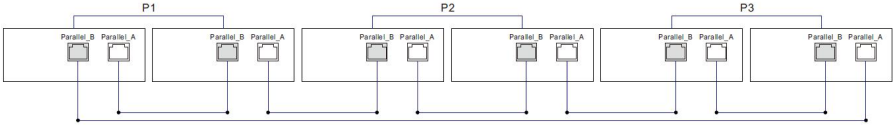

3+2+1 system:

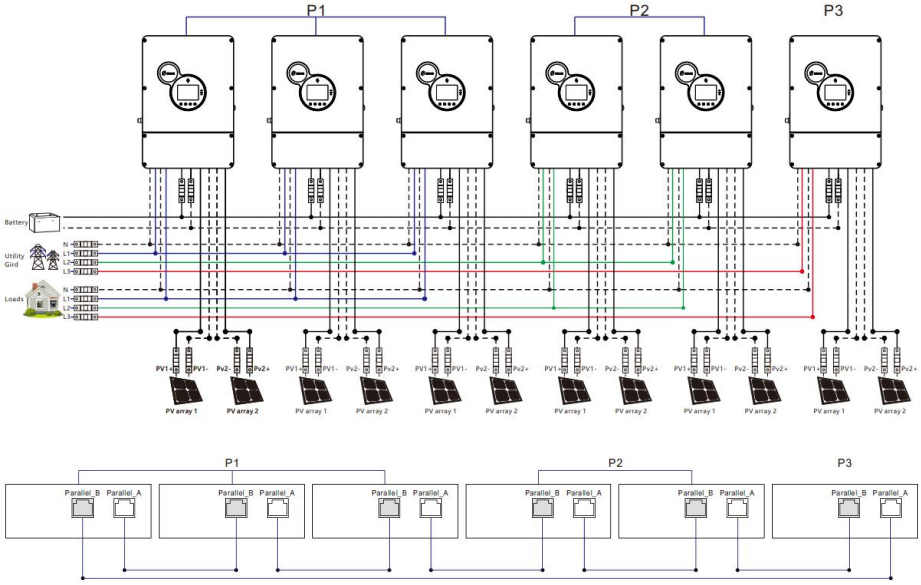

4+1+1 system:

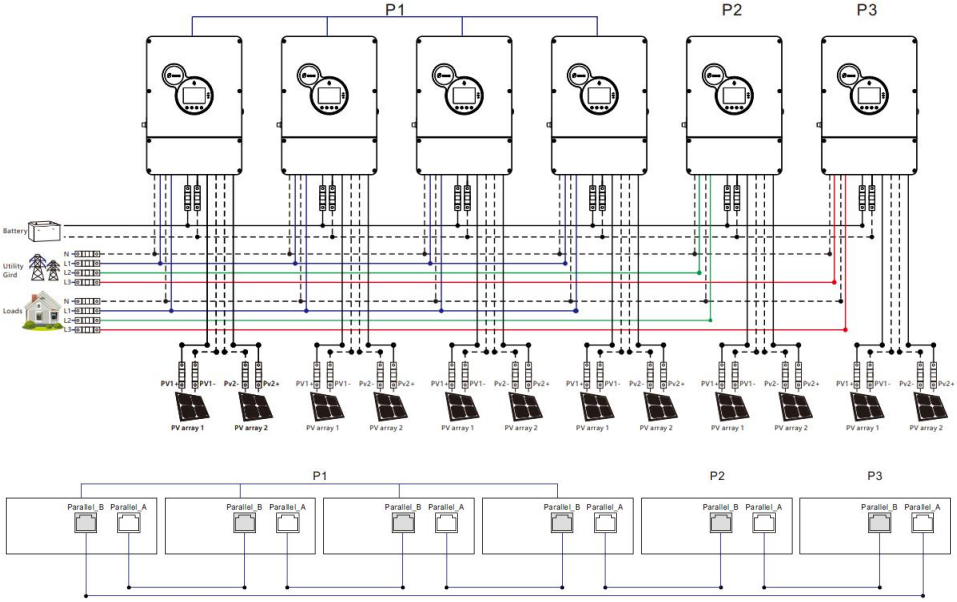

Note:

1) Before starting up and running, please check whether the connection was correct to avoid any abnormalities in the system.
2) All wiring must be fixed and reliable to avoid wire drop during use.
3) When the AC output is wired to the load, it shall be properly wired according to the requirements of the electrical load equipment to avoid damage to the load equipment.
4) Settings [38] need to be set consistently or only for the host. When the machine is running, the voltage set by the host shall prevail, and the master will force the rewrite of the other slave machines to keep the same set. Only can be set in the standby mode.
5) Machine factory default for single machine mode, if you use parallel or three-phase function, you need to set the [31] item parameters through the screen. The setting method is: power on one machine at a time, the rest of the machine off, and then set the [31] item parameters according to the site system operation mode. After this machine is set successfully, turn off the machine switch and wait for the machine to be powered down, then set the rest of the machines in turn until all machines are set, and then all machines are powered up again at the same time and enter the working state.

   The [31] setting item:

   When in single phase parallel connection : setting [31] should be set as "PAL".

   When in three phase parallel connection, setting [31] should be set as follows: all machines in phase 1 must be set as "3P1", all machines in phase 2 must be set as "3P2", all machines in phase 3 must be set as "3P3". At present, the voltage phase difference between P1-P2, P1-P3 and P2-P3 is 120 degrees.

   a. When the output voltage set in the setting [38] is 230Vac (S model), the line voltage between the live wire L1 in phase 1 and the live wire L2 in phase 2 is 230*1.732 = 398Vac, and similarly the line voltage between L1-L3, L2-L3 is 398Vac; the single phase voltage between L1-N, L2-N, L3-N is 230Vac.
6) After the system runs, the output voltage is measured correctly, and then the load setting is connected.

3. Operating modes

3.1 Charging mode

1、**Solar First:** priority shall be given to charging by PV, and mains charging will be started only when the PV has failed. It can fully utilize solar energy to generate power in the daytime and then switch to mains charging to keep the battery level, which can be used in regions where the grid is relatively stable and the feed-in tariff is relatively expensive.

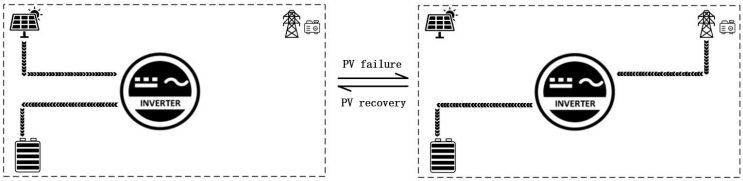

2、**Mains First:** priority shall be given to charging by mains power, and charging with PV power will be started only when the mains has failed.

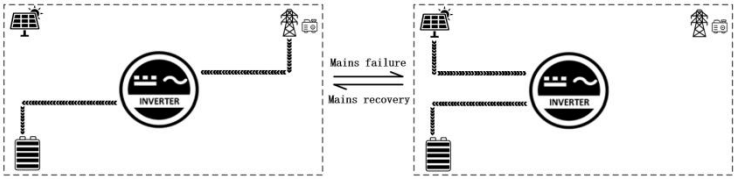

3、**Hybrid Charging:** hybrid charging of PV and mains power, give priority to PV MPPT charging, and supplement mains power when PV energy is insufficient. When the PV energy is sufficient, the mains power will stop charging. This is the mode of fast charging and suitable for unstable areas of power grid, which can provide sufficient backup power at any time.

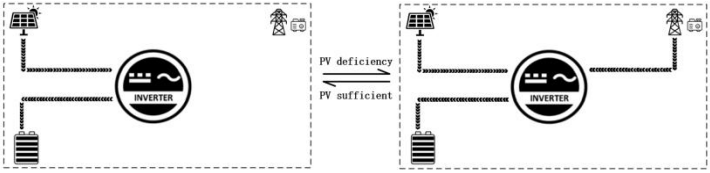

4、**Only Solar:** Only PV charging, no mains charging is initiated. This is the most energy-efficient mode and the battery power comes from solar energy, which is usually used in regions with good daylighting conditions.

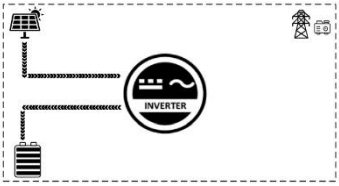

3.2 Output mode

1、**Solar First:** PV and battery will power the load, with diversified charging modes available and output mode optional, when the Solar First Mode is selected, the use of green solar energy can be maximized for energy efficiency and emission reduction. Switch to Mains Power when PV has failed. This mode can maximize the use of solar energy while maintaining the battery power, which is suitable for regions with relatively stable power grid.

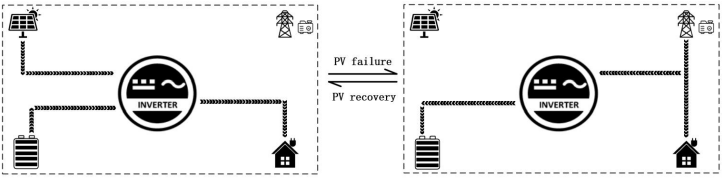

2、**Mains First:** switch to inverter power supply only when Mains Power has failed, which is equivalent to backup UPS and is used in regions with unstable power grid.

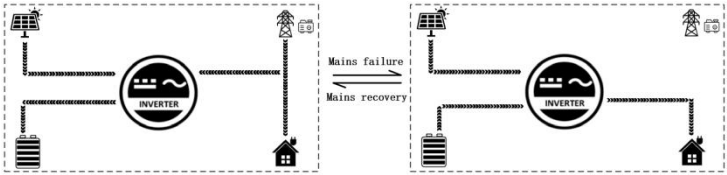

3、**Inverter First:** switch to Mains Power supply only when the battery is under-voltage. This mode uses DC energy to the maximum extent and is used in regions with stable power grid.

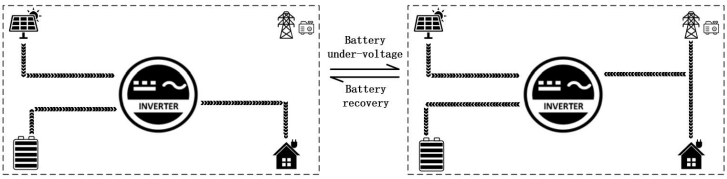

4、**Hybrid Output:** when no battery is connected or when the battery is full, the load power is supplied by the PV and the utility together, and PV at maximum power output.

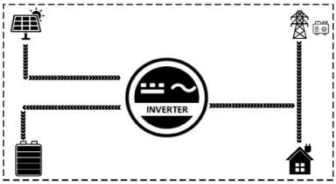

5、**Grid-connected Generation:** enabling grid-connected power generation, photovoltaics and battery power to the grid.

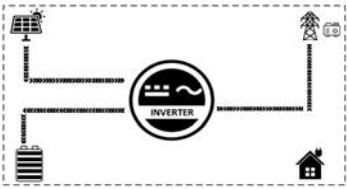

4. LCD screen operating instructions

4.1 Operation and display panel

The operation and display panel is shown below, including one LCD screen, 3 indicator lights and 4 operation buttons.

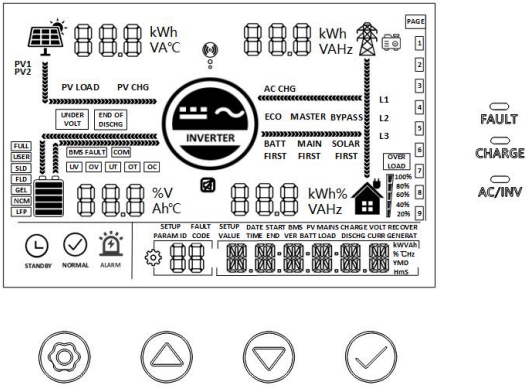

4.2 Operation buttons introduction

Function Key	Description
	Menu of Enter/Exit Settings
	Page Number/Option Increase
	Page Number/Option Decrease
	Under the menu of Settings, OK/Enter Options

4.3 Indicators introduction

Indicator light	Color	Description
AC/INV	Yellow	Normally On: Mains Power output
		Flicker: Inverter output
CHARGE	Green	Flicker: The battery is being charged.
		Normally On: The charging is completed.
FAULT	Red	Normally On: Fault status

4.4 LCD screen introduction

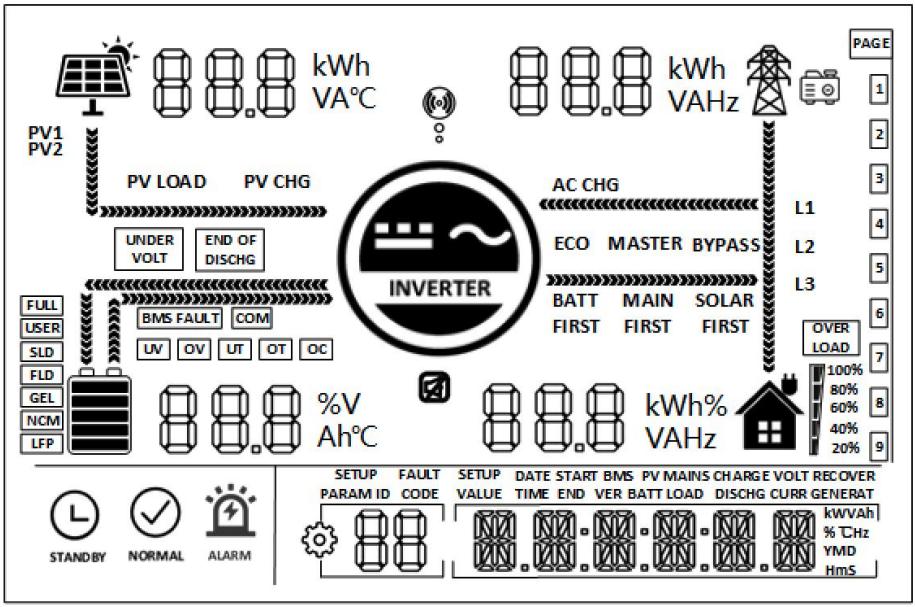

Icon	function	Icon	function
	Indicates mains power		Indicates the inverter is working
	Indicates generator		Indicates home appliances
	Indicates solar power	OVER LOAD	Indicates AC output is overload

	Battery remaining capacity is below 5% Battery remaining capacity is 5%~19% Battery remaining capacity is 20%~39% Battery remaining capacity is 40%~59% Battery remaining capacity is 60%~79% Battery remaining capacity is 80%~100%		Load percentage is below 5% Load percentage is 5%~19% Load percentage is 20%~39% Load percentage is 40%~59% Load percentage is 60%~79% Load percentage is 80%~100%
	Indicates that the machine is communicating with the surveillance equipment		Indicates that the buzzer is not enabled
FULL	Indicates that the battery is fully charged	USER	Indicates that the current battery type of the machine is user-defined
SLD	Indicates that the current battery type of the machine is sealed lead-acid battery	FLD	Indicates that the current battery type of the machine is flooded lead-acid battery
GEL	Indicates that the current battery type of the machine is gel battery	NCM	Indicates that the current battery type of the machine is NCM battery
LFP	Indicates that the current battery type of the machine is LFP battery	PAGE	Display the page number prompt of the main interface
1 2 3 4 5 6 7 8 9			Indicates the data page of the main display interface
STANDBY	Indicates that the machine is currently idle	NORMAL	Indicates that the machine is currently in normal operation

ALARM	Indicates that the machine is currently in an alarm or fault state		Indicates that the machine is currently in the parameter setting state
PV LOAD	Indicates that the PV is in a direct load state	PV CHG	Indicates that the PV is in a state of charge
AC CHG	Indicates that the AC is in a state of charge	BYPASS	Indicate that the Mains Power is in the bypass state
ECO	Indicates that the system is enabled in the ECO mode	BATT FIRST	Indicates that the output mode is Battery First
MAIN FIRST	Indicates that the output mode is Mains Power first	SOLAR FIRST	The indicated output mode is Solar First.
UNDER VOLT	Indicates battery under voltage	END OF DISCHG	Battery over-discharge
COM	Indicates internal communication failure	UV	Indicates system under voltage
OV	Indicates system over voltage	UT	Indicates system low temperature
OT	Indicates system over temperature	OC	Indicates system over current
BMS FAULT	Indicates BMS communication failure		Indicates the direction of energy flow
	When the system is in alarm or fault state, the main interface displays fault code; display setting options when setting		Display parameters of PV, battery, mains power and load
SETUP VALUE DATE TIME START END BMS VER PV BATT MAINS LOAD CHARGE DISCHG VOLT CURR RECOVER GENERAT kWVAh %℃Hz YMD HmS		Main Interface: display real-time time, date, total PV power generation, total load power consumption, RS485 address, version number Setting Interface: display setting contents	

Real-time data viewing method

On the LCD main screen, press the button for page turning to view the real-time data of the machine.

Page	PV side parameters	Battery side parameters	Mains side parameters	Load side parameters	Comprehensive parameters
1	PV Voltage	Battery Voltage	AC Voltage	Load Voltage	Current Time
2	PV Current	Battery Current	AC Current	Load Current	Current Date
3	PV Power	BMS Batt SOC	Power From Grid	Load Power	PV Total kWh
4	PV Today kWh	BMS Batt Voltage	Power To Grid	Load Today kWh	Load Total kWh
5	PV Temperature	INV Temperature	AC Frequency	Load Frequency	RS485 Address
6	Maintenance Parm	Battery Rated Voltage	Grid Today kWh	Load kVA	Soft Version
7	PV Rated Voltage	Battery Rated Current	Grid Countdown	Load Rated Power	Parallel Mode

4.5 Setup parameters description

Key Operation Instructions: Enter the setting menu and exit the set ting menu, please press , After entering the setting menu, the parameter number [00] will flash. At this time, you can press the and key to select the parameter code to be set. Then press to enter the parameter editing state, at this time, the value of the parameter flashes, adjust the value of the parameter through the and , and finally press to complete the editing of the parameter and return to the parameter selection state.

Parameter Number	Parameter Name	Setting options	Description
00	Exit	[00]ESC	Menu of Exit Settings.
01	Supply priority mode	[01] AC 1ST Default	Mains Power First Mode, switch to the Inverter only when the Mains Power has failed.
		[01] BT 1ST	Inverter First Mode: switch to Mains Power only when the battery is under-voltage or lower than Parameter [04] set value.

		[01] PV 1ST	Solar First Mode: switch to Mains Power when PV has failed or battery is lower than Parameter [04] Set Value.
02	Output frequency	[02] 50.0 Default	Bypass self-adaptation; when the mains is connected, it automatically adapts to the mains frequency; when the mains is disconnected, the output frequency can be set through this menu. The default output frequency of the 230V machine is 50HZ.
		[02] 60.0	
03	AC input voltage	[03] UPS Default	The input mains voltage range of 230V machine is 170~280V.
		[03] APL	The input mains voltage range of 230V machine is 90~280V.
04	Battery to mains	[04] 43.6V Default	When the Parameter [01] = BT 1ST/PV 1ST, the battery voltage is lower than the set value, and the output is switched from inverter to Mains Power, and the set range is 40V~52V.
05	Mains to battery	[05] 56.8V Default	When the Parameter [01] = BT 1ST/PV 1ST, the battery voltage is higher than the set value, and the output is switched from mains to inverter, and the set range is 48V~60V.
06	Charging mode	[06] Hybrid Default	Hybrid charging by PV and utility, give priority to PV, and use the utility for supplementary when PV energy is insufficient. When the PV energy is sufficient, the utility will stop charging. Note: PV and utility are available for charging at the same time only when the bypass output is loaded, and only PV charging can be activated when the inverter is working.
		[06] AC1ST	The Mains Power is charged first, and PV charging is started only when the Mains Power has failed.
		[06] PV1ST	Priority shall be given to charging by PV and mains charging will be initiated only when the PV has failed.

		[06] ONLYPV	Only PV charging, no mains charging is enabled.
07	Maximum charging current	[07] 60A Default	Set Range of 0~100A.
08	Battery type	[08] USER	User-defined, all battery parameters can be set.
		[08] SLd	Sealed lead-acid battery with constant charge voltage of 57.6V and floating charge voltage of 55.2V.
		[08] FLd	Flooded lead-acid battery with constant charge voltage of 58.4V and floating charge voltage of 55.2V.
		[08] GEL Default	GEL lead-acid battery with constant charge voltage of 56.8V and floating charge voltage of 55.2V.
		[08]LFP14/LFP15/ LFP16	LFP14/LFP15/LFP16 are corresponding to Battery Series of 14, 15 and 16, and their default constant charge voltages are 49.6V, 53.2V and 56.8V respectively, which can be adjusted.
		[08] NCM13/NCM14	NCM lithium battery, adjustable.
09	Boost voltage	[09] 57.6V Default	Setting of Boost Voltage: Set Range of 48V~58.4V, Step 0.4V, available when the battery type is user-defined and lithium battery.
10	Maximum boost duration	[10] 120 Default	Setting of Maximum Boost Duration, which is the maximum charging time when the voltage reaches the Parameter [09] when charging at constant voltage, with the Set Range of 5min~900min, and Step of 5min.
11	Float charge voltage	[11] 55.2V Default	Floating Charge Voltage, with the Set Range of 48V~58.4 V, Step of 0.4 V.
12	Over-discharge voltage	[12] 42V Default	Over-discharge Voltage: the battery voltage is lower than such criterion, and the Inverter output is turned off after the time delay parameter is set to [13], with the Set Range of 40V~48V and Step of 0.4V.

13	Over discharge delay time	[13] 5S Default	Over-discharge Delay Time: when the battery voltage is lower than the Parameter [12], the inverter output is turned off upon delay of time set by this Parameter, with the Set Range of 5S~50S, Step of 5S.
14	Battery under voltage alarm point	[14] 44V Default	Battery under-voltage alarm point: when the battery voltage is lower than such criterion, under-voltage alarm will be given, the output will not be shut down, with the Set Range of 40V~52V, Step of 0.4V.
15	Battery discharge limit voltage	[15] 40V Default	Battery Discharge Limit Voltage: the battery voltage is lower than such criterion, output and shut down immediately. Set Range of 40V~52V, Step of 0.4V, available when the battery type is user-defined and lithium battery.
16	Equalization charge	[16] DIS	No equalization charging.
		[16] ENA Default	Enable equalization charging, only Flooded lead-acid batteries, sealed lead-acid batteries and user-defined are effective.
17	Equalization voltage	[17] 58V Default	Equalization Charging Voltage, with the Set Range of 48V~58V, Step of 0.4V, available for Flooded lead-acid battery, sealed lead-acid battery and user-defined.
18	Equalization charging time	[18] 120 Default	Equalization Charging Time, with the Set Range of 5min~900min, Step of 5min, available for Flooded lead-acid battery, sealed lead-acid battery and user-defined.
19	Equalized charging delay	[19] 120 Default	Equalization Charging Delay, with the Set Range of 5min~900min, Step of 5min, available for Flooded lead-acid battery, sealed lead-acid battery and user-defined.
20	Equalization charge interval time	[20] 30 Default	Equalization Charge Interval Time, 0~30days, Step of 1day, available for Flooded lead-acid battery,

			sealed lead-acid battery and user-defined
21	Equalization charging start-stop	[21] ENA	Start equalization charging immediately
		[21] DIS Default	Stop equalization charging immediately
22	ECO mode	[22] DIS Default	NO ECO mode
		[22] ENA	When the ECO mode is enabled, if the load is below 50W, the inverter output is delayed for 5 minutes and then the output is turned off. When the hull switch is pressed to the "OFF" State, and then pressed to the "ON" State, the inverter will resume the output.
23	Overload automatic restart	[23] DIS	Overload automatic restart is disabled. If overload occurs, the output will be shut down, and the machine will not be restarted.
		[23] ENA Default	Enable overload auto restart. If overload occurs, shut down output, delay the machine for 3 min and then restart the output. After 5 times in total, no startup will be resumed.
24	Auto restart upon over-temperature	[24] DIS	Over-temperature automatic restart is disabled. If over-temperature occurs, the output will be shut down, and the machine will not be restarted for output.
		[24] ENA Default	Enable automatic restart upon over-temperature. If over-temperature occurs, shut down output, and restart output after the temperature has dropped.
25	Buzzer alarm	[25] DIS	No alarm.
		[25] ENA Default	Enable alarm.
26	Mode change reminder	[26] DIS	Alarm is disabled when the status of the main input source has change.
		[26] ENA Default	Alarm is disabled when the status of the main

			input source has change.
27	Inverter overload to bypass	[27] DIS	Automatic switch to Mains Power is disabled when the Inverter is overloaded.
		[27] ENA Default	Automatic switch to Mains Power when the inverter is overloaded.
28	Current of charging under grid electricity	[28] 60A Default	AC output 230Vac, with the Set Range of 0~60A
30	RS485 address setting	[30] 1 Default	RS485 communication address can be set in the range of 1~254 (single) and 1~6 (parallel).
31	AC output mode **(can be set in the standby mode only)**	[31] SIG Default	Single machine setting.
		[31] PAL	Single-phase parallel connection setting.
		[31] 3P1/3P2/3P3	Three-phase parallel connection setting.
		All machines in phase 1 must be set as “3P1”; All machines in phase 2 must be set as “3P2”; All machines in phase 3 must be set as “3P3”. **When the output voltage set in the setting [38] is 230Vac (S model)** At present the line voltage between the live wire L1 in phase 1 and the live wire L2 in phase 2 is 230*1.732 = 398Vac, and similarly the line voltage between L1-L3, L2-L3 is 398Vac; the single phase voltage between L1-N, L2-N, L3-N is 230Vac.	
32	BMS communication port options	[32]DIS default	BMS communication is disabled. At this time the RS485-2 port can be used for our PC and remote monitoring interface.
		[32] 485	Select RS485-2 port for BMS communication.
		[32] CAN	Choose CAN as the BMS communication interface (this interface is optional and only supported by some models). At this time the RS485-2 port can be used for our PC and remote monitoring interface.
33	BMS communication	When [32] enables BMS communication, the corresponding lithium battery manufacturer brand should be selected for communication	

	protocol	[33] WOW Default	PAC=PACE，RDA=RITAR，AOG=ALLGRAND BATTERY，OLT=OLITER，HWD=SUNWODA, DAQ=DAKING, WOW=SRNE, PYL=PYLONTECH，UOL=WEILAN
34	PV grid-connected power generation function	[34] DIS Default	Disable this Function
		[34] TOGRID	When not connected to a battery or when the battery charging current is saturated, the surplus PV energy is fed directly to the local load and to the grid when bypassed.
		[34] TOLOAD	When bypassed when no battery is connected or when the battery charging current is saturated, the load power is supplied by the PV together with the mains.
35	Battery under-voltage recovery point	[35] 52V Default	When the battery is under-voltage, the battery voltage should be greater than this set value to restore the inverter AC output of the battery, and the set range is 44V~54.4V.
36	Max.PV charging current	[36] 80A default	Max PV charger current. Setting range: 0~100A
37	Battery recharge recovery point	[37] 52V Default	After the battery is fully charged, the inverter will stop charging, and when the battery voltage is lower than this Value, the Inverter will resume charging again. And the set range is 44V~54V.
38	AC output rated voltage	[38] 230Vac Default	You can set: 200/208/220/240Vac.
39	Charge current limiting method (when BMS is enabled)	[38] LC SET	Max. battery charging current not greater than the value of setting [07].
		[38] LC BMS Default	Max. battery charging current not greater than the limit value of BMS.
		[38] LC INV	Max. battery charging current not greater than the logic judgements value of the inverter.
40	1-section start charging time	[40] 00:00:00 Default	Set Range: 00: 00-23: 59: 00.
41	1-section end	[41] 00:00:00	Set Range: 00: 00-23: 59: 00.

	charging time	Default	
42	2-section start charging time	[42] 00:00:00 Default	Set Range: 00: 00-23: 59: 00.
43	2-section end charging time	[43] 00:00:00 Default	Set Range: 00: 00-23: 59: 00.
44	3-section start charging time	[44] 00:00:00 Default	Set Range: 00: 00-23: 59: 00.
45	3-section end charging time	[45] 00:00:00 Default	Set Range: 00: 00-23: 59: 00.
46	Sectional charging function	[46] DIS Default	Disable this Function.
		[46] ENA	After the sectioned charging function is enabled, the power supply mode will change to BT1ST, and system will enable the mains power charging only in the set charging period or battery over discharge; If the sectioned discharge function is enabled at the same time, the power supply mode of the system will change to AC 1ST, which only enable the mains charging in the set charging period. If charging and discharging periods overlap, priority is given to charging or switching to the battery inverter supply when the mains power is lost.
47	1-section start discharging time	[47] 00:00:00 Default	Set Range: 00: 00-23: 59: 00.
48	1-section end discharging time	[48] 00:00:00 Default	Set Range: 00: 00-23: 59: 00.
49	2-section start discharging time	[49] 00:00:00 Default	Set Range: 00: 00-23: 59: 00.
50	2-section end discharging time	[50] 00:00:00 Default	Set Range: 00: 00-23: 59: 00.
51	3-section start discharging time	[51] 00:00:00 Default	Set Range: 00: 00-23: 59: 00.
52	3-section end discharging time	[52] 00:00:00 Default	Set Range: 00: 00-23: 59: 00.

53	Sectional discharge function	[53] DIS Default	Disable this Function.
		[53] ENA	After the sectioned discharge function is enabled, the power supply mode will change to AC 1ST and the system will switch to battery inverter power supply only during the set discharge period or when the mains power is off.
54	Current date setting	[54] 00:00:00 Default	Set Range: 00:01: 01-99:12:31.
55	Current time setting	[55] 00:00:00 Default	Set Range: 00:00: 00-23:59: 59.
56	Leakage protection function	[56] DIS Default	Disable this Function.
		[56]ENA	Enable leakage protection function.
57	Stop charging current	[57] 2A Default	Charging stops when the default charging current is less than this setting.
58	Discharge alarm SOC setting	[58] 15% Default	SOC alarm when capacity is less than this set value (valid when BMS communication is normal).
59	Cut-off discharge SOC settings	[59] 5% Default	Stops discharging when the capacity is less than this setting (valid when BMS communication is normal).
60	Cut-off charge SOC settings	[60]100% Default	Stops charging when capacity is greater than or equal to this setting (valid when BMS communication is normal).
61	Switch to mains SOC settings	[61] 10% Default	Switch to mains when capacity is less than this setting (valid when BMS communication is normal).
62	Switch to inverter output SOC settings	[62] 100% Default	Switches to inverter output mode when capacity is greater than or equal to this setting (valid when BMS communication is normal).
63	N-G grounding function	[63] DIS Default	Disable this function.
		[63] ENA	Enable N-G grounding function.

64	Password input	[64] 000000	Used to enter the user password to unlock the screen settings menu, factory default password "000000". Password input range "000000" ~ "065535".
65	User password setting	[65] 000000	Used to set the user's password, the setting is visible after entering the password for 64 items, the password setting range is "000000" to "065535".
66	Grid connection standards	[66] CEI021 Default	"CEI021" : CEI0-21, Italian low-voltage grid; "VD4105" : VDE-AR-N-4105, German low-voltage grid; "E50549" : EN50549-1, Irish low voltage grid.
70	ISO insulation detection function	[70] DIS Default	Disable this function.
		[70] ENA	Enabling insulation impedance detection.

4.6 Battery type parameters

For Lead-acid Battery :

Battery type / Parameters	Sealed lead acid battery (SLD)	Colloidal lead acid battery (GEL)	Vented lead acid battery (FLD)	User-defined (User)
Overvoltage disconnection voltage	60V	60V	60V	36 ~ 60V (Adjustable)
Battery fully charged recovery point	52V (Adjustable)	52V (Adjustable)	52V (Adjustable)	52V (Adjustable)
Equalizing charge voltage	58.4V	56.8V	59.2V	36 ~ 60V (Adjustable)
Boost charge voltage	57.6V	56.8V	58.4V	36 ~ 60V (Adjustable)
Floating charge voltage	55.2V	55.2V	55.2V	36 ~ 60V (Adjustable)
Undervoltage alarm voltage(01 fault)	44V	44V	44V	36 ~ 60V (Adjustable)
Undervoltage alarm voltage recovery point(01 fault)	Undervoltage alarm voltage+0.8V			
Low voltage disconnection voltage(04 fault)	42V	42V	42V	36 ~ 60V (Adjustable)
Low voltage disconnection voltage recovery point (04 fault)	52V (Adjustable)	52V (Adjustable)	52V (Adjustable)	52V (Adjustable)
Discharge limit voltage	40V	40V	40V	36 ~ 60V (Adjustable)
Over-discharge delay time	5s	5s	5s	1 ~ 30s (Adjustable)
Equalizing charge duration	120 minutes	-	120 minutes	0 ~ 600 minutes (Adjustable)
Equalizing charge interval	30 days	-	30 days	0 ~ 250 days (Adjustable)
Boost charge duration	120 minutes	120 minutes	120 minutes	10 ~ 600 minutes (Adjustable)

For Lithium Battery :

Battery type / Parameters	(NCM13)	(NCM14)	(LFP16)	(LFP15)	(LFP14)
Overvoltage disconnection voltage	60V	60V	60V	60V	60V
Battery fully charged recovery point(item 37)	50.4V (Adjustable)	54.8V (Adjustable)	53.6V (Adjustable)	50.4V (Adjustable)	47.6V (Adjustable)
Equalizing charge voltage	53.2V (Adjustable)	57.6V (Adjustable)	56.8V (Adjustable)	53.2V (Adjustable)	49.2V (Adjustable)
Boost charge voltage	53.2V (Adjustable)	57.6V (Adjustable)	56.8V (Adjustable)	53.2V (Adjustable)	49.2V (Adjustable)
Floating charge voltage	53.2V (Adjustable)	57.6V (Adjustable)	56.8V (Adjustable)	53.2V (Adjustable)	49.2 (Adjustable)
Undervoltage alarm voltage(01 fault)	43.6V (Adjustable)	46.8V (Adjustable)	49.6V (Adjustable)	46.4V (Adjustable)	43.2V (Adjustable)
Undervoltage alarm voltage recovery point(01 fault)	Undervoltage alarm voltage+0.8V				
Low voltage disconnection voltage(04 fault)	38.8V (Adjustable)	42V (Adjustable)	48.8V (Adjustable)	45.6V (Adjustable)	42V (Adjustable)
Low voltage disconnection voltage recovery point (04 fault)(item 35)	46V (Adjustable)	49.6V (Adjustable)	52.8V (Adjustable)	49.6V (Adjustable)	46V (Adjustable)
Discharge limit voltage	36.4V	39.2V	46.4V	43.6V	40.8V
Over-discharge delay time	30s (Adjustable)	30s (Adjustable)	30s (Adjustable)	30s (Adjustable)	30s (Adjustable)
Boost charge duration	120 minutes (Adjustable)	120 minutes (Adjustable)	120 minutes (Adjustable)	120 minutes (Adjustable)	120 minutes (Adjustable)

5. Other functions

5.1 Dry contact

Working principle: This dry contact can control the ON/OFF of the diesel generator to charge the battery. ① Normally, the terminals are that the NC-N point is closed and the NO-N point is open; ② When the battery voltage reaches the low voltage disconnection point, the relay coil is energized, and the terminals turn to that the NO-N point is closed while NC-N point is open. At this point, NO-N point can drive resistive loads: 125VAC/1A, 230VAC/1A, 30VDC/1A.

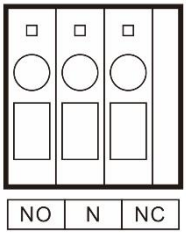

5.2 RS485 communication port

The communication port has RS485-1 and RS485-2 with 2 with two functions:

① RS485-2 communication port allows RS485 communication with Lithium Battery BMS;

② RS485-1 communication port can be connected with our self-developed RS485 to WIFI/GPRS communication module, which can be connected to our inverter, and the operating parameters and status of the inverter can be viewed through the mobile phone APP.

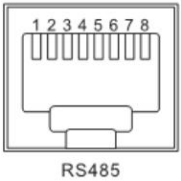

③ As shown in the figure:

RS485-1: Pin 1 is 5V power supply, Pin 2 is GND, Pin 7 is RS485-A1, and Pin 8 is RS485-B1;

RS485-2: Pin 1 is 5V power supply, Pin 2 is GND, Pin 7 is RS485-A2, and Pin 8 is RS485-B2;

5.3 USB communication port

This is a USB communication port, which can be used for USB communication with the optional PC host software. To use this port, you should install the corresponding "USB to serial chip CH340T driver" in the computer.

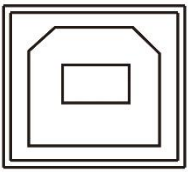

5.4 Can communication function

This communication port allows communication with the BMS (customisation required), terminal left interface CANL, terminal right interface CANH.

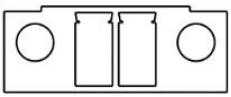

5.5 Parallel communication function (parallel)

a) This port is used for parallel communication, through which the parallel modules can communicate with each other.

b) Each machine has two 8Pin ports, one for the parallel_A and one for the parallel_B.

c) When connecting, make sure to connect the local Parallel_A to the parallelized machine Parallel_B, or the local Parallel_B should be connected to the parallelized machine Parallel_A.

d) Do not connect local parallel_A to local parallel_B.

6. Protection

6.1 Protections provided

No.	Protections	Description
1	PV current/power limiting protection	When charging current or power of the PV array configured exceeds the PV rated, it will charge at the rated.
2	PV night reverse-current protection	At night, the battery is prevented from discharging through the PV module because the battery voltage is greater than the voltage of PV module.
3	Mains input over voltage protection	When the mains voltage exceeds 280V (230V model), the mains charging will be stopped and switched to the inverter mode.
4	Mains input under voltage protection	When the mains voltage is lower than 170V (230V model /UPS mode), the mains charging will be stopped and switched to the inverter mode.
5	Battery over voltage protection	When the battery voltage reaches the overvoltage disconnection point, the PV and the mains will be automatically stopped to charge the battery to prevent the battery from being overcharged and damaged.

6	Battery low voltage protection	When the battery voltage reaches the low voltage disconnection point, the battery discharging will be automatically stopped to prevent the battery from being over-discharged and damaged.
7	Load output short circuit protection	When a short-circuit fault occurs at the load output for more than 200ms, the output AC voltage is immediately switched off and then manually re-energised and switched on before normal output can be restored.
8	Heat sink over temperature protection	When the internal temperature is too high, the inverter will stop charging and discharging; when the temperature returns to normal, charging and discharging will resume.
9	Overload protection	Output again 3 minutes after an overload protection, and turn the output off after 5 consecutive times of overload protection until the machine is re-powered. For the specific overload level and duration, refer to the technical parameters table in the manual.
10	PV reverse polarity protection	When the PV polarity is reversed, the machine will not be damaged.
11	AC reverse protection	Prevent battery inverter AC current from being reversely input to Bypass.（except for grid-connected mode）
12	Bypass over current protection	Built-in AC input overcurrent protection circuit breaker.
13	Battery input over current protection	When the discharge output current of the battery is greater than the maximum value and lasts for 1 minutes, the AC input would switched to load.
14	Battery input protection	When the battery is reversely connected or the inverter is short-circuited, the battery input fuse in the inverter will blow out to prevent the battery from being damaged or causing a fire.
15	Charge short protection	When the external battery port is short-circuited in the PV or AC charging state, the inverter will protect and stop the output current.
16	CAN communication loss protection	In parallel operation, an alarm will be given when CAN communication is lost.
17	Parallel connection error protection	In parallel operation, the equipment will be protected when the parallel line is lost.

18	Parallel battery voltage difference protection	In parallel operation, the equipment will be protected when the battery connection is inconsistent and the battery voltage is greatly different from that detected by the host.
19	Parallel AC voltage difference protection	In parallel operation, the equipment will be protected when the AC IN input connection is inconsistent.
21	Synchronization signal fault protection	The equipment will be protected when there is a fault in the guidance signal between parallel buses, causing inconsistent behavior of each inverter.

6.2 Fault code

Fault code	Fault name	Whether it affects the output or not	Description
【01】	BatVoltLow	No	Battery undervoltage alarm
【02】	BatOverCurrSw	Yes	Battery discharge average current overcurrent (software protection)
【03】	BatOpen	Yes	Battery not-connected alarm
【04】	BatLowEod	Yes	Battery undervoltage stop discharge alarm
【05】	BatOverCurrHw	Yes	Battery overcurrent (hardware protection)
【06】	BatOverVolt	Yes	Charging overvoltage protection
【07】	BusOverVoltHw	Yes	Bus overvoltage (hardware protection)

【08】	BusOverVoltSw	Yes	Bus overvoltage (software protection)
【09】	PvVoltHigh	No	PV overvoltage protection
【10】	PvOCSw	No	Boost overcurrent (software protection)
【11】	PvOCHw	No	Boost overcurrent (hardware protection)
【13】	OverloadBypass	Yes	Bypass overload protection
【14】	OverloadInverter	Yes	Inverter overload protection
【15】	AcOverCurrHw	Yes	Inverter overcurrent (hardware protection)
【17】	InvShort	Yes	Inverter short circuit protection
【19】	OverTemperMppt	No	Buck heat sink over temperature protection
【20】	OverTemperInv	Yes	Inverter AC output with load or AC charging radiator over-temperature protection
【21】	FanFail	Yes	Fan blockage or failure fault
【22】	EEPROM	Yes	Memory failure

【23】	ModelNumErr	Yes	Model setting error
【26】	RlyShort	Yes	Inverted AC Output Backfills to Bypass AC Input
【29】	BusVoltLow	Yes	Internal battery boost circuit failure
【30】	BatCapacityLow1	No	Alarm given when battery capacity rate is lower than 10% (setting BMS to enable validity)
【31】	BatCapacityLow2	No	Alarm given when battery capacity rate is lower than 5% (setting BMS to enable validity)
【32】	BatCapacityLowStop	Yes	Inverter stops when battery capacity is low (setting BMS to enable validity)
【34】	CanCommFault	Yes	CAN communication fault in parallel operation
【35】	ParaAddrErr	Yes	Parallel ID （communication address）setting error
【37】	ParaShareCurrErr	Yes	Parallel current sharing fault
【38】	ParaBattVoltDiff	Yes	Large battery voltage difference in parallel mode
【39】	ParaAcSrcDiff	Yes	Inconsistent AC input source in parallel mode
【40】	ParaHwSynErr	Yes	Hardware synchronization signal error in parallel mode
【41】	InvDcVoltErr	Yes	Inverter DC voltage error

【42】	SysFwVersionDiff	Yes	Inconsistent system firmware version in parallel mode
【43】	ParaLineContErr	Yes	Parallel line connection error in parallel mode
【44】	Serial number error	Yes	No serial number set at factory
【45】	Error setting of split-phase mode	Yes	Item [31] setting error
【56】	Low insulation resistance fault	No	PV1+, PV2+ and PV- abnormally low impedance to ground
【57】	Leakage current overload fault	Yes	System leakage current exceeds limit
【58】	BMS communication error	No	Check whether the communication line is connected correctly and whether [33] is set to the corresponding lithium battery communication protocol
【59】	BMS alarm	No	Check the BMS fault type and troubleshoot battery problems
【60】	BMS battery low temperature alarm	No	BMS alarm battery low temperature
【61】	BMS battery over temperature alarm	No	BMS alarm battery over temperature
【62】	BMS battery over current alarm	No	BMS alarm battery over current
【63】	BMS battery undervoltage alarm	No	BMS alarm low battery
【64】	BMS battery over voltage alarm	No	BMS alarm battery over voltage

6.3 Handling measures for part of faults

Fault code	Faults	Remedy
Display	No display on the screen	Check if the battery switch or PV switch is closed; whether the switch is in the "ON" state; press any button on the screen to exit the screen sleep mode.
【06】	Battery overvoltage protection	Check that the battery voltage does not exceed the protection value. If it does, discharge the battery until the voltage falls below the battery over-voltage recovery point.
【01】 【04】	Battery undervoltage protection	Charge the battery until it returns to the low voltage disconnection recovery voltage.
【21】	Fan failure	Check if the fan is not turning or blocked by foreign object.
【19】 【20】	Heat sink over temperature protection	When the temperature of the device is cooled below the recovery temperature, normal charge and discharge control is resumed.
【13】 【14】	Bypass overload protection, inverter overload protection	① Reduce the use of power equipment; ② Restart the unit to resume load output.
【17】	Inverter short circuit protection	① Check the load connection carefully and clear the short-circuit fault points; ② Re-power up to resume load output.
【09】	PV overvoltage	Use a multimeter to check if the PV input voltage exceeds the maximum allowable input voltage rated.
【03】	Battery disconnected alarm	Check if the battery is not connected or if the battery circuit breaker is not closed.
【40】 【43】	Parallel connection fault	Check if the parallel line is not connected well, such as loose or wrong connection.
【35】	Parallel ID setting error	Check whether the setting of parallel ID number is repeated.
【37】	Parallel current sharing fault	Check if the parallel current sharing line is not connected well, such as loose or wrong connection.
【39】	Inconsistent AC input source in parallel mode	Check whether the parallel AC inputs are from the same input interface.

【42】	Inconsistent system firmware version in parallel mode	Check whether the software version of each inverter is consistent.
【44】	Serial number error	Incorrect device serial number setting.
【45】	Parallel mode error	There is a device in the parallel system with the wrong parallel mode setting.
【49】	High grid voltage	Check that the grid voltage is within the normal range, if the grid voltage is abnormal, wait until the grid voltage is restored.
【50】	Low grid voltage	Check that the grid voltage is within the normal range, if the grid voltage is abnormal, wait until the grid voltage is restored.
【51】	High grid frequency	Check that the grid frequency is within the normal range, if the grid frequency is abnormal, wait until the grid frequency is restored.
【52】	Low grid frequency	Check that the grid frequency is within the normal range, if the grid frequency is abnormal, wait until the grid frequency is restored.
【53】	Grid unconnected	Check if the grid is correctly connected, e.g. if the switch is closed and if the grid is disconnected.
【54】	Grid-connected current with DC component over	Power down and restart the device, if it continues to report faults, contact the manufacturer after sales.
【56】	Low insulation resistance fault	Check that the system is well grounded and that the PV modules and cables are not worn.
【57】	Leakage current overload fault	Check that the system is well grounded and that the loads are not operating abnormally.

7.Troubleshooting

- **In order to maintain the best long-term performance, it is recommended to conduct following checks twice a year.**

  1. Make sure that the airflow around the unit is not blocked and remove any dirt or debris from the heat sink.
  2. Check that all exposed wires are damaged by exposure to sunlight, friction with other objects around them, dryness, bite by insects or rodents, etc., and the wires shall be repaired or replaced if necessary.
  3. Verify for the consistency of indication and display with the operation of the device. Please pay attention to the display of any faults or errors, and take corrective actions if necessary.
  4. Check all wiring terminals for corrosion, insulation damage, signs of high temperature or burning/discoloration, and tighten the screws.
  5. Check for dirt, nesting insects and corrosion, and clean up as required.
  6. If the arrester has failed, replace in time to prevent lightning damage to the unit or even other equipment of the user.

Warning: Danger of electric shock! When doing the above operations, make sure that all power supplies of the inverter have been disconnected, and all capacitors have been discharged, and then check or operate accordingly!

- **The company does not assume any liability for damage caused by:**

  ① Improper use or use in improper site.

  ② Open circuit voltage of the PV module exceeds the maximum allowable voltage rated.

  ③ Temperature in the operating environment exceeds the limited operating temperature range.

  ④ Disassemble and repair the solar hybrid inverter without permission.

  ⑤ Force majeure: damage that occurs in transportation or handling of the solar hybrid inverter.

8. Technical parameters

Model	HESP4840S100-H	HESP4846S100-H	HESP4850S100-H HESP4855S100-H	HESP4860S100-H
Battery input				
Rated battery input voltage	48V (minimum start-up voltage 44V)			
Battery voltage range	40-60Vdc ± 0.6Vdc (undervoltage alarm / shutdown voltage / overvoltage alarm / overvoltage recovery etc.)			
Battery type	Lead-acid / Li-ion / User Defined			
Off-grid output				
Rated output power(W)	4000	4600	5500	6000
Rated output voltage（Vac）	230Vac (200/208/220/240Vac can be set）			
Output voltage error	±5%			
Output frequency range (Hz)	50Hz ± 0.3Hz/60Hz ± 0.3Hz			
Max. efficiency	>90%			
Overload protection	(102% < load < 125%) ±10%: error and 5 minutes to switch off output. (125%<load<150%) ±10%: error and switch off the output after 10 seconds; Load > 150% ±10%: error and switch off after 5 seconds.			
Peak power	8000VA	9200VA	11000VA	12000VA
Loaded motor capacity	3HP	4HP	4HP	4HP
Switching time （bypass and inverter）	10ms (typical value)			
Energy-saving mode	Non-energy-saving mode ≤100W; energy-saving mode ≤50W			
On-grid output				
Rated output power (W)	4000W	4600W	5500W	6000W
Max. apparent power（VA）	4000VA	4600VA	5500VA	6000VA
Max. output current（A）	17.4A	20A	24A	26A
THDI	<3%			

Power Factor	0.8 leading to 0.8 lagging			
Rated voltage （Vac）	230Vac			
Frequency	50Hz/60Hz			
Mains charging				
Max. charging current	60A			
Charging current error	± 5Adc			
Charging voltage range	40－58Vdc			
Short-circuit protection	Circuit breakers and blown fuses			
Circuit Breaker Specifications	40A			
Max. efficiency of mains charging	92%			
Overcharge protection	Charge off after warning			
Solar charging				
Max. PV open circuit voltage	500Vdc			
Operating voltage range	120-500Vdc			
MPPT voltage range	120-450Vdc			
Max. PV input current	16A*2			
Max. input power	3000W+3000W	3500W+3500W	4000W+4000W	4500W+4500W
Battery voltage range	40－58Vdc			
Charging current range（settable）	0-100A			
Charge short-circuit protection	Blown fuse			
Wiring protection	Reversal protection			
Parallel mode				

Num. of parallel units	1-6 units
Certification specification	
Specification approval	CE(IEC 62109-1/2)、CEI0-21、VDE-AR-N-4105、EN50549-1
EMC	EN61000、FCC-SODC
Operating temperature range	-25°C to 60°C（>45°C derate）
Storage temperature range	-25°C ~ 60°C (-13°F ~ 140°F)
Humidity range	0% to 100%
Noise	≤60dB
Protection level	IP65
Heat Dissipation	Forced air cooling, adjustable air speed
Communication	USB / RS485(WiFi/GPRS) / CAN / Dry cantact
Dimension（L*W*D）	556*345*182mm (1.82*1.13*0.60ft)
Weight（kg）	20.8kg (45.86lb)